Library of
Connection Elements

Advant Controller 31-S
Safety-Related Automation

907 PC 339
Programming and Test Software
Safety Manual

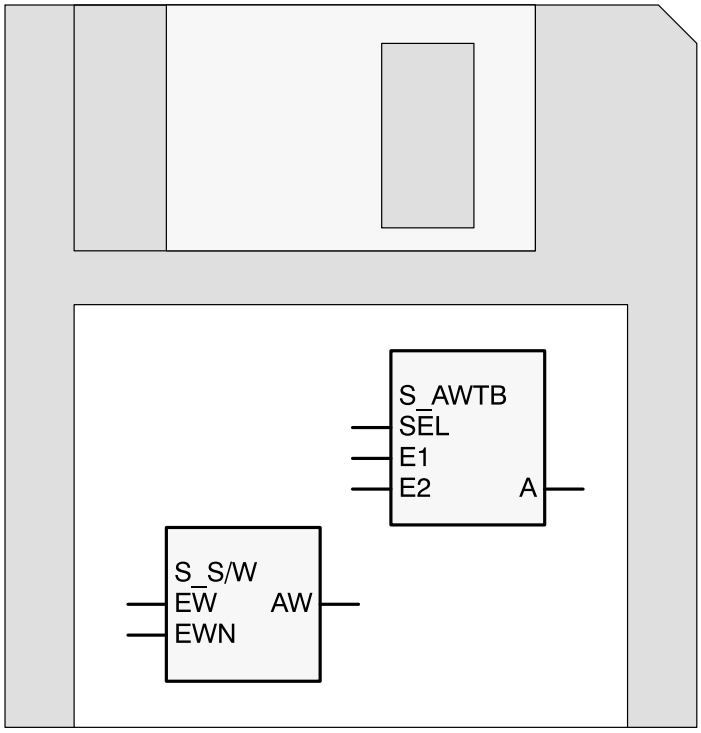

Detailed description of the connection elements

Introduction

Safety-related connection elements (S-CEs) may only be used in the safety-related user program module S_APP-S. The normal connection elements can be found in volume 7 of the 907 PC 331 file.

S-CEs work with internal redundancy and diversity and trigger a program abort in case of internal errors (error FK2 with LED).

Due to the redundant programming, errors in the program memory are covered. The diverse programming of functions allows to detect processing errors in the program.

Due to this, some of the CEs require the input of redundant parameters.

All input parameters at the S-CEs are subject to a value range check, i.e. for S-CEs with binary values in the S format it is checked whether the input value is 0001_H or $FFFE_H$. In case of word values it is checked whether the input value is TRUE and presented as 2's complement. In case of an error, the program is aborted.

Value		Storage value	Representation in
Binary value 0 Binary value 1		FFFEH 0001H	-2 +1
Word value	+32767	$7FFF_H$ (TRUE) 8001_H (2's complement)	+32767 -32767
	+32766	$7FFE_H$ (TRUE) 8002_H (2's complement)	+32766 -32766
	+1	0001_H (TRUE) $FFFF_H$ (2's complement)	+1 -1
	0	0000_H (TRUE) 0000_H (2's complement)	0 0
	-1	$FFFF_H$ (TRUE) 0001_H (2's complement)	-1 +1
	-32766	8002_H (TRUE) $7FFE_H$ (2's complement)	-32766 +32766
	-32767	8001_H (TRUE) $7FFF_H$ (2's complement)	-32767 +32767

- Binary data are stored as word value:
  - 0 -> FFFEH
  - 1 -> 0001H
- For word data 2 words each are stored:
  - one as TRUE value and one as
  - 2's complement

The description for safety-related connection elements is represented as follows.

Function

Call name in FBD

Multiplication S_*

The S-CE carries out the multiplication of two words which are assigned to the S-CE inputs as TRUE and in 2's complement. The result is assigned to the outputs A0 and AN0 as TRUE and in 2's complement.

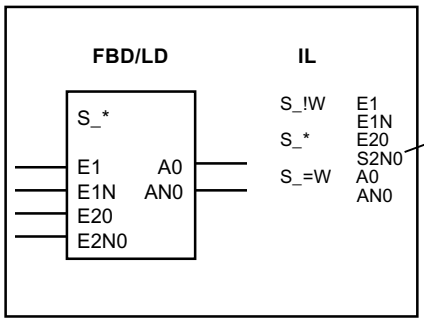

Representation of the S-CE in FBD and IL

Parameters

E1	WORD	EW, MW, AW, KW	Data word 1, TRUE
E1N	WORD	EW, MW, AW, KW	Data word 1, 2's complement
E20	WORD	EW, MW, AW, KW	Data word 2, TRUE
E2N0	WORD	EW, MW, AW, KW	Data word 2, 2's complement
A0	WORD	MW	Result of the multiplication, TRUE
AN0	WORD	MW	Result of the multiplication, 2's complement

Parameters:
Inputs/outputs
Data types
Permitted operands
Description

CE data

Output updating:	yes
Number of historical values:	none
Available as of:	ADVANT CONTROLLER 31-S, 907 PC 339

Other CE data

Description

The S-CE carries out the multiplication of two words which are assigned to the S-CE inputs as TRUE and in 2's complement. The result is assigned to the outputs A0 and AN0 as TRUE and in 2's complement.

The inputs E20 and E2N0 and the outputs A0 and AN0 can be doubled in pairs. The inputs and outputs cannot be inverted.

Parameter overview

E1 is the CE input to which operand 1 is assigned.

E1N is the CE input to which the 2's complement of operand 1 is assigned.

E20 is the CE input to which operand 2 is assigned.

E2N0 is the CE input to which the 2's complement of operand 2 is assigned.

A0 is the CE output to which the result of the multiplication is output as TRUE.

AN0 is the CE output to which the result of the multiplication is output as 2's complement.

Detailed description

907 PC 339 / Issued: 08.02 19 5

Further explanations

FBD/LD

The inputs of the CE are assigned to the left, the outputs to the right.

If input or output parameters are written in *Italics*, this means that they are not displayed after the S-CE is called.

CE data

Output updating: indicates whether the output is updated in each cycle. If "no", the connection to other CEs is not possible.

Safety-related CEs

CE name	Function	Page
Group 1	**Read/Write I/O modules**	
S_LEB	Read S Input Module BINARY	5
S_LEA	Read S Input Module ANALOG	7
S_LAB	Read S Output Module BINARY	9
S_SAB	Write S Output Module BINARY	11
Group 2	**Word and Arithmetical functions**	
S_=W	Allocation WORD	13
S_+	Addition	14
S_-	Subtraction	15
S_*	Multiplication	16
S_:	Division	17
S_+D	Addition Double Word	18
S_-D	Subtraction Double Word	19
S_*D	Multiplication Double Word	20
S_:D	Division Double Word	21
S_BEG	Limiter	22
S_IDL	Indirect Read	23
S_IDSm	Write Word Variable, Indexed	24
S_AWT	Selection Gate WORD	26
S_SQRT	Square Root	27
S_SIN	Sine Calculation	28
S_COS	Cosine Calculation	29
S_ATAN	Arc Tangent Calculation	30
S_INIT	Initialization of Flag Ranges	31
S_INSK	Initialization of Step Chains	32
S_FKG	Function Generator	33
S_!SK	Interrogation of a Step	35
S_=SK	Setting a Step	36
Group 3	**Comparator**	
S_=?	Comparison Equal	37
S_<	Comparison Less than	38
S_<=	Comparison Less than or Equal to	39
S_>	Comparison Greater	40
S_>=	Comparison Greater than or Equal to	41
S_<>	Comparison Unequal	42

List of CEs is continued on the next page

The safety-related CEs are included in the library ...\BIB\AC31-S.VE1/VE2/VE3 together with the AC31 standard CEs.

Safety-related CEs

... continuation

CE name	Function	Page
Group 4	**Logical Operations, Converter S into Not S and vice versa, Memory Functions**	
S_&	Logical AND	43
S_/	Logical OR	44
S_=	Allocation BINARY	45
S_W/S	Conversion S into S Format	46
S_B/S	Conversion BINARY into S Format	47
S_S/W	Conversion S Format into WORD	48
S_S/B	Conversion S Format into BINARY	49
S_WDW	Conversion Word to Double Word	50
S_DWW	Conversion Double Word to Word	51
S_=S	Set Memory	52
S_=R	Reset Memory	53
S_SR	Reset Memory, Dominating	54
S_RS	Set Memory, Dominating	55
S_AWTB	Selection Gate, BINARY	56
Group 5	**Special Functions**	
S_ABO	Abort	57
S_SPBM	Jump to Label	58
S_CRC8	Generation of CRC8 Check Sum	59
Group 6	**Time Functions**	
S_ESV	ON Delay	60
S_ASV	OFF Delay	62
S_|+	Positive Edge	64
S_|-	Negative Edge	65

The safety-related CEs are included in the library ...\BIB\AC31-S.VE1/VE2/VE3 together with the AC31 standard CEs.

The S-CE reads the binary input information from the safety telegram of the binary input module 07DI90-S and supplies the data on the CE outputs E0...E7.

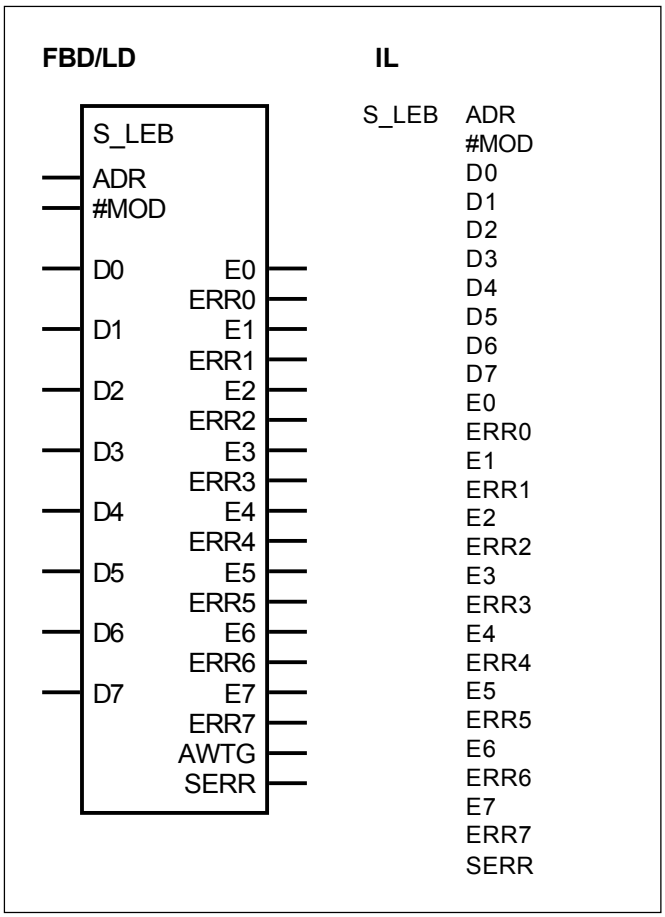

Parameters

ADR	BIT	E	First address of a S input module
#MOD	DIRECT CONSTANT	#,#H	Module address of the input module
D0...D7	WORD	EW, MW, AW, KW	Default value in case of errors
E0...E7	WORD	MW	Binary input information
ERR0...ERR7	WORD	MW	Status message of the input channel
SERR	WORD	MW	Sum error message

CE data

Output updating:	yes
Number of historical values:	3 words in historical value memory
Available as of:	ADVANT CONTROLLER 31-S, 907 PC 339

Description

The S-CE reads the binary input information from the safety telegram of the binary input module 07DI90-S and supplies the data on the CE outputs E0...E7 in safety-related data format. The further processing in the safety-related part of the PLC program is exclusively executed using these safety words.

The inputs and outputs can neither be doubled nor inverted.

Parameter overview

ADR is the first address of a safety-related input module. For the channel number always 0 is entered (e.g. E10,00).

#MOD is the module address of the corresponding module.

D0...D7 specifies the default values to be defined by the user which are used as input value in case of an error for further processing.

E0...E7 binary input value.

ERR0...ERR7 are the status outputs (error flags). For signal 1 (0001_H) they signalize a defect input or an external error at module 07DI90-S. For signal 0 ($FFFE_H$) the corresponding input is ready for operation.

SERR is the CE output sum error. If a violation of the safety telegram is detected, the corresponding error number is assigned to this output:

10_D ... CRC8 error

20_D ... Module number error

30_D ... Running number error

Specification

Before the telegram decoding, several tests are carried out:

- CRC8: Checksum test of the entire safety telegram.
- Module number: Check of the safety telegram whether the module number is correct.
- Running number: Check whether a new telegram with changed running number was received from the input module 07DI90-S within a defined time (max. 200ms).
- Status test of each channel. In case of an error in one or several channels, the predefined default values (D0/D0N...D7/D7N) are assigned to the affected channels.

Only after the error-free execution of the above mentioned tests, the data assignment of the user data to E0...E7 is carried out.

For incorrect tests, the sum error output SERR is set to the corresponding error number as well as ERR0...ERR7 to signal 1 (0001_H). The default values are assigned to the CE outputs E0...E7.

Telegram structure

The telegram sent by a 07DI90-S is stored to the DPR (DUAL PORT RAM TRANSFER MEMORY) with the following structure.

Address	Offset	High Byte	Low Byte
En,00... En,15	**0**	**Run. No.**	**Module addr.**
En+1,00... En+1,15	**1**	**Status byte**	**Data byte**
En+2,00... En+2,15	**2**	**not used**	**CRC8 byte**
En+3,00... En+3,15	**3**	**not used**	**not used**

The input module 07DI90-S seizes 4 addresses at the CS31 system bus (e.g. for E10,00 the addresses E10,00... E13,15 are assigned).

The S-CE reads the analog input information from the safety telegram of the analog input module 07AI90-S and supplies the data (TRUE/2's complement) on the CE outputs E0/E0N...E3/E3N.

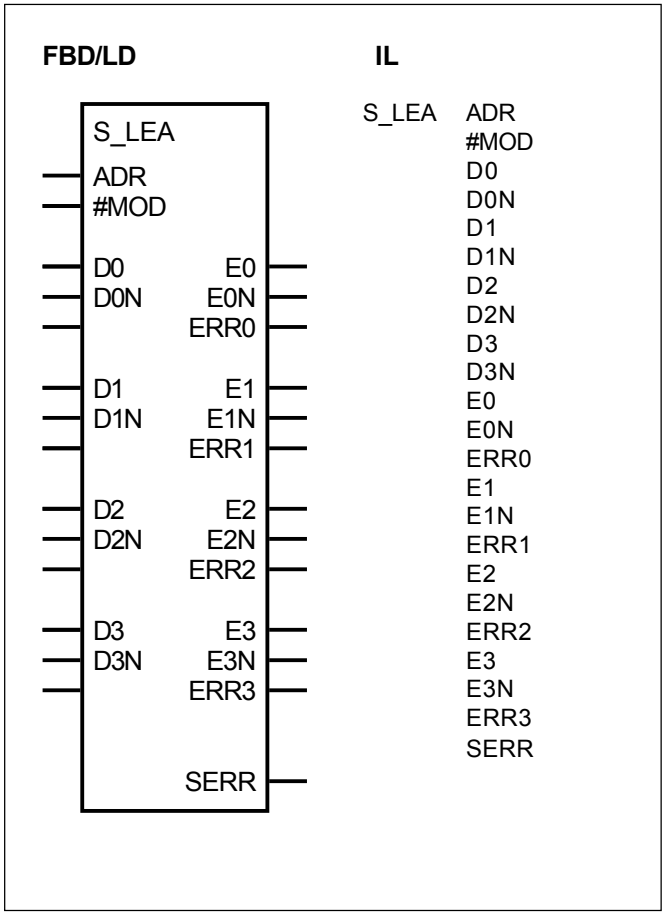

Parameters

ADR	WORD	EW	First address of a S input module
#MOD	DIRECT CONSTANT	#,#H	Module address of the input module
D0...D3	WORD	EW, MW, AW, KW	Default value in case of errors (TRUE)
D0N...D3N	WORD	EW, MW, AW, KW	Default value in case of errors (2's complement)
E0...E3	WORD	MW	Analog input value (TRUE)
E0N...E3N	WORD	MW	Analog input value (2's complement)
ERR0...ERR3	WORD	MW	Status message of the input channel
SERR	WORD	MW	Sum error message

CE data

Output updating:	yes
Number of historical values:	3 words in historical value memory
Available as of:	ADVANT CONTROLLER 31-S, 907 PC 339

Description

The S-CE reads the analog input information from the safety telegram of the analog input module 07AI90-S and supplies the data (TRUE/2's complement) on the CE outputs E0/E0N...E3/E3N. The further processing in the safety-related part of the PLC program is exclusively executed using these two values.

The inputs and outputs can neither be doubled nor inverted.

Parameter overview

ADR is the first address of a safety-related analog input module. For the channel number always a 0 is entered (e.g. EW00,00).

#MOD is the module address of the corresponding module.

D0...D3 specifies the default values (TRUE) to be defined by the user which are used as input value in case of an error for further processing.

D0N...D3N specifies the default values (2's complement) to be defined by the user which are used as input value in case of an error for further processing.

E0...E3 analog input value (TRUE).

E0N...E3N analog input value (2's complement).

ERR0...ERR3 are the status outputs (error flags). For signal 1 (0001_H) they signalize a defect input or an external error at module 07AI90-S. For signal 0 ($FFFE_H$) the corresponding input is ready for operation. In case of an error in channel n, the predefined value Dn/DnN is assigned to the corresponding output En/EnN.

SERR is the CE output sum error. If a violation of the safety telegram is detected, the corresponding error number is assigned to this output:

10_D ... CRC8 error

20_D ... Module number error

30_D ... Running number error

Specification

Before the telegram decoding, several tests are carried out:

- CRC8: Checksum test of the entire safety telegram.
- Module number: Check of the safety telegram whether the module number is correct.
- Running number: Check whether a new telegram with changed running number was received from the input module 07AI90-S within a defined time (max. 200ms).
- Status test of each channel. In case of an error in one or several channels, the predefined default values (D0/D0N...D3/D3N) are assigned to the affected channels.

Only after the error-free execution of the above mentioned tests, the data assignment of the user data to E0/E0N...E3/E3N is carried out.

For incorrect tests, the sum error output SERR is set to the corresponding error number as well as ERR0...ERR3 to signal 1 (0001_H). The default values are assigned to the CE outputs E0/E0N...E3/E3N.

Telegram structure

The telegram sent by a 07AI90-S is stored to the DPR (DUAL PORT RAM TRANSFER MEMORY) with the following structure.

Address	Offset	High Byte	Low Byte
EWn,00	0	Run. No.	Module addr.
EWn,01	1	Ch0 high	Ch0 low
EWn,02	2	Ch1 high	Ch1 low
EWn,03	3	Ch2 high	Ch2 low
EWn,04	4	Ch3 high	Ch3 low
EWn,05	5	CRC8 byte	Status byte

Ch = Analog channel

The analog input module 07AI90-S seizes 1 address at the CS31 system bus.

The S-CE is used for requesting the status of a safety-related output module 07DO90-S.

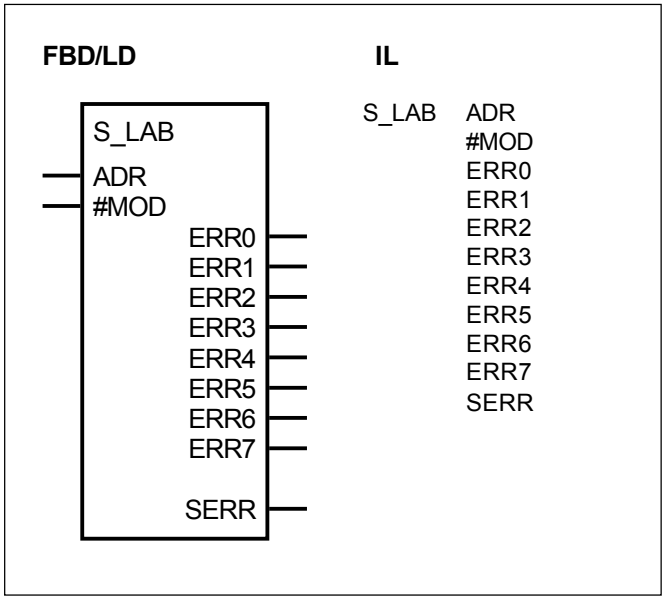

Parameters

ADR	BIT	A	First address of a S output module
#MOD	DIRECT CONSTANT	#,#H	Module address of the output module
ERR0...ERR7	WORD	MW	Status message of the output channel
SERR	WORD	MW	Sum error message

CE data

Output updating:	yes
Number of historical values:	3 words in historical value memory
Available as of:	ADVANT CONTROLLER 31-S, 907 PC 339

Description

The S-CE is used for requesting the status of a safety-related output module 07DO90-S. Depending on the respective status information, a predefined reaction of the system can be planned.

S_LAB processes the safety-related telegrams and evaluates the status information of the module.

The inputs and the output can neither be doubled nor inverted.

Parameter overview

ADR is the first address of a safety-related output module. For the channel number always a 0 is entered (e.g. A14,00).

#MOD is the module address of the corresponding module.

ERR0...ERR7 are the status outputs (error flags). For signal 1 (0001_H) they signalize a defect output or an external error at module 07DO90-S. For signal 0 ($FFFE_H$) the corresponding output is ready for operation.

SERR is the CE output sum error. If a violation of the safety telegram is detected, the corresponding error number is assigned to this output:

10_D ... CRC8 error

20_D ... Module number error

30_D ... Running number error

Specification

Before the telegram decoding, several tests are carried out:

- CRC8: Checksum test of the entire safety telegram.
- Module number: Check of the safety telegram whether the module number is correct.
- Running number: Check whether a new telegram with changed running number was received from the output module 07DO90-S within a defined time (max. 200ms).

Only after the error-free execution of the above mentioned tests, the status information of the corresponding channel are output to the parameters ERR0...ERR7.

For incorrect tests, the sum error output SERR is set to the corresponding error number as well as ERR0...ERR7 to signal 1 (0001_H).

Telegram structure

The telegram sent by a 07DO90-S is stored to the DPR (DUAL PORT RAM TRANSFER MEMORY) with the following structure.

Address	Offset	High Byte	Low Byte
En,00... En,15	**0**	**Run. No.**	**Module addr.**
En+1,00... En+1,15	**1**	**CRC8 byte**	**Status byte**

The output module 07DO90-S seizes 2 addresses at the CS31 system bus (e.g. for A14,00 the addresses E14,00... E15,15 are assigned).

Note:

The output module 07DO90-S occupies input and output addresses. The CE S_LAB reads the information from the input addresses. The output information is send via the CE S_SAB to the outputs.

The S-CE assigns user data in S format to the safety-related output module 07DO90-S.

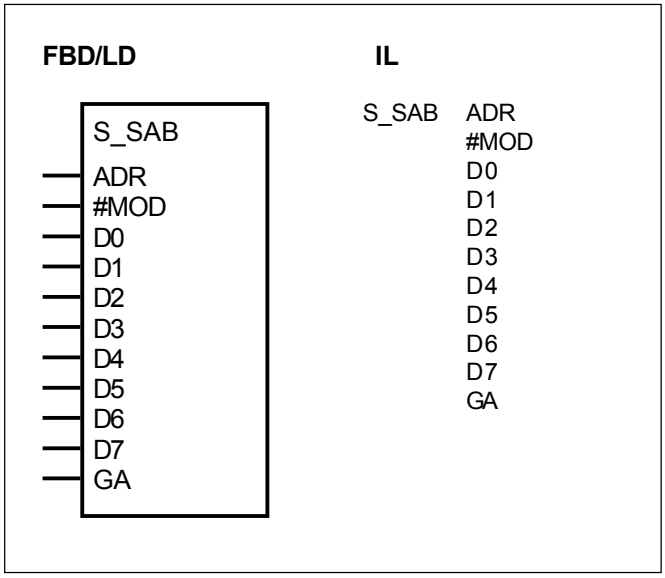

Parameters

ADR	BIT	A	First address of a S output module
#MOD	DIRECT CONSTANT	#,#H	Module address of the output module
D0...D7	WORD	EW, MW, AW, KW	User data in S format (output value)
GA	WORD	EW, MW, AW, KW	Total switch-off

CE data

Output updating:	none
Number of historical values:	1 word in historical value memory
Available as of:	ADVANT CONTROLLER 31-S, 907 PC 339

Description

The S-CE assigns user data to the safety-related output module 07DO90-S which are applied to the inputs D0...D7 in S format.

S_SAB then generates a data telegram comprising the module number, running number, data as well as the CRC8.

The inputs can neither be doubled nor inverted.

Parameter overview

ADR is the first address of a safety-related output module. For the channel number always 0 is entered (e.g. A14,00).

#MOD is the module address of the corresponding module.

D0...D7 are the user data inputs (output message). For signal 1 (0001_H), the corresponding output channel at module 07DO90-S is switched-on. For signal 0 ($FFFE_H$), the corresponding output channel is switched-off.

GA is used to overall switch-off the outputs. For signal 1 (0001_H), all output channels at module 07DO90-S are switched-off. For signal 0 ($FFFE_H$), the corresponding user data input D0...D7 is active.

Telegram structure

The telegram prepared for the 07DO90-S is stored to the DPR (DUAL PORT RAM TRANSFER MEMORY) with the following structure.

Address	Offset	High Byte	Low Byte
An,00... An,15	**0**	**Run. No.**	**Module addr.**
An+1,00... An+1,15	**1**	**CRC8 byte**	**User data**

The output module 07DO90-S seizes 2 addresses at the CS31 system bus (e.g. for A14,00 the addresses A14,00... A15,15 are assigned).

Note:

The output module 07DO90-S occupies input and output addresses. The CE S_LAB reads the information from the input addresses. The output information is send via the CE S_SAB to the outputs.

The S-CE carries out an allocation word which is assigned to the S-CE inputs as TRUE and in 2's complement. The assignment result is assigned to the outputs A0 and AN0 as TRUE and in 2's complement.

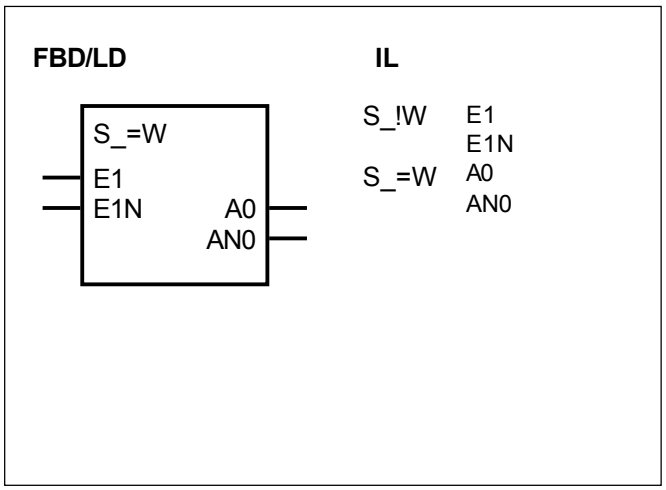

Parameters

E1	WORD	EW, MW, AW, KW	Input signal, TRUE
E1N	WORD	EW, MW, AW, KW	Input signal, 2's complement
A0	WORD	MW	Output signal, TRUE
AN0	WORD	MW	Output signal, 2's complement

CE data

Output updating:	yes
Number of historical values:	none
Available as of:	ADVANT CONTROLLER 31-S, 907 PC 339

Description

The S-CE carries out an allocation word which is assigned to the S-CE inputs as TRUE and in 2's complement. The assignment result is assigned to the outputs A0 and AN0 as TRUE and in 2's complement.

The outputs A0 and AN0 can be doubled in pairs. The inputs and outputs can be inverted.

Parameter overview

E1 is the CE input to which the input signal (TRUE) is assigned.

E1N is the CE input to which the 2's complement of E1 is assigned.

A0 is the CE output to which the input information (TRUE) is output.

A0N is the CE output to which the 2's complement of A0 is output.

The S-CE carries out an addition of two words which are assigned to the S-CE inputs as TRUE and in 2's complement. The result is assigned to the outputs A0 and AN0 as TRUE and in 2's complement.

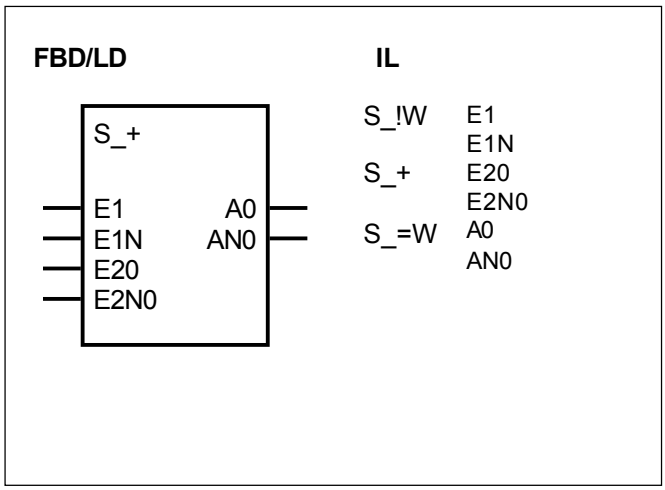

Parameters

E1	WORD	EW, MW, AW, KW	Data word 1, TRUE
E1N	WORD	EW, MW, AW, KW	Data word 1, 2's complement
E20	WORD	EW, MW, AW, KW	Data word 2, TRUE
E2N0	WORD	EW, MW, AW, KW	Data word 2, 2's complement
A0	WORD	MW	Result of the addition, TRUE
AN0	WORD	MW	Result of the addition, 2's complement

CE data

Output updating:	yes
Number of historical values:	none
Available as of:	ADVANT CONTROLLER 31-S, 907 PC 339

Description

The S-CE carries out an addition of two words which are assigned to the S-CE inputs as TRUE and in 2's complement. The result is assigned to the outputs A0 and AN0 as TRUE and in 2's complement.

The inputs E20 and E2N0 and the outputs A0 and AN0 can be doubled in pairs. The inputs and outputs cannot be inverted.

Parameter overview

E1 is the CE input to which operand 1 is assigned.

E1N is the CE input to which the 2's complement of operand 1 is assigned.

E20 is the CE input to which operand 2 is assigned.

E2N0 is the CE input to which the 2's complement of operand 2 is assigned.

A0 is the CE output to which the result of the addition is output as TRUE.

AN0 is the CE output to which the result of the addition is output as 2's complement.

The S-CE carries out a subtraction of two words which are assigned to the S-CE inputs as TRUE and in 2's complement. The result is assigned to the outputs A0 and AN0 as TRUE and in 2's complement.

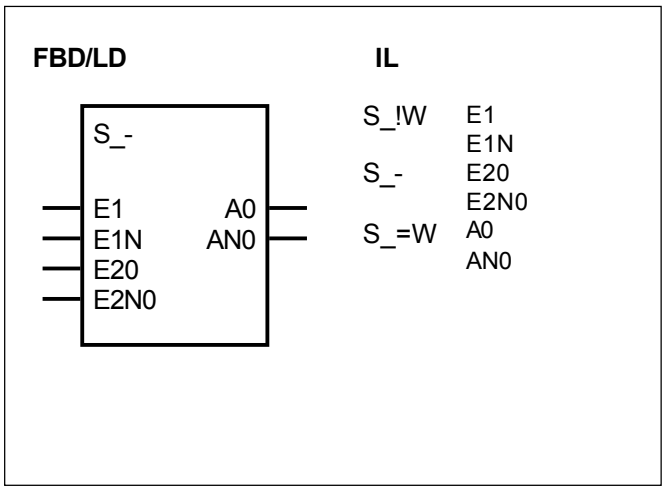

Parameters

E1	WORD	EW, MW, AW, KW	Data word 1, TRUE
E1N	WORD	EW, MW, AW, KW	Data word 1, 2's complement
E20	WORD	EW, MW, AW, KW	Data word 2, TRUE
E2N0	WORD	EW, MW, AW, KW	Data word 2, 2's complement
A0	WORD	MW	Result of the subtraction, TRUE
AN0	WORD	MW	Result of the subtraction, 2's complement

CE data

Output updating:	yes
Number of historical values:	none
Available as of:	ADVANT CONTROLLER 31-S, 907 PC 339

Description

The S-CE carries out a subtraction of two words which are assigned to the S-CE inputs as TRUE and in 2's complement. The result is assigned to the outputs A0 and AN0 as TRUE and in 2's complement.

The inputs E20 and E2N0 and the outputs A0 and AN0 can be doubled in pairs. The inputs and outputs cannot be inverted.

Parameter overview

E1 is the CE input to which operand 1 is assigned.

E1N is the CE input to which the 2's complement of operand 1 is assigned.

E20 is the CE input to which operand 2 is assigned.

E2N0 is the CE input to which the 2's complement of operand 2 is assigned.

A0 is the CE output to which the result of the subtraction is output as TRUE.

AN0 is the CE output to which the result of the subtraction is output as 2's complement.

The S-CE carries out the multiplication of two words which are assigned to the S-CE inputs as TRUE and in 2's complement. The result is assigned to the outputs A0 and AN0 as TRUE and in 2's complement.

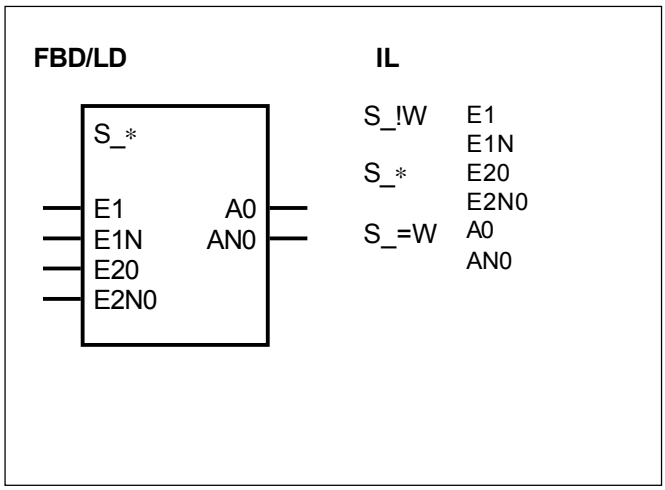

Parameters

E1	WORD	EW, MW, AW, KW	Data word 1, TRUE
E1N	WORD	EW, MW, AW, KW	Data word 1, 2's complement
E20	WORD	EW, MW, AW, KW	Data word 2, TRUE
E2N0	WORD	EW, MW, AW, KW	Data word 2, 2's complement
A0	WORD	MW	Result of the multiplication, TRUE
AN0	WORD	MW	Result of the multiplication, 2's complement

CE data

Output updating:	yes
Number of historical values:	none
Available as of:	ADVANT CONTROLLER 31-S, 907 PC 339

Description

The S-CE carries out the multiplication of two words which are assigned to the S-CE inputs as TRUE and in 2's complement. The result is assigned to the outputs A0 and AN0 as TRUE and in 2's complement.

The inputs E20 and E2N0 and the outputs A0 and AN0 can be doubled in pairs. The inputs and outputs cannot be inverted.

Parameter overview

E1 is the CE input to which operand 1 is assigned.

E1N is the CE input to which the 2's complement of operand 1 is assigned.

E20 is the CE input to which operand 2 is assigned.

E2N0 is the CE input to which the 2's complement of operand 2 is assigned.

A0 is the CE output to which the result of the multiplication is output as TRUE.

AN0 is the CE output to which the result of the multiplication is output as 2's complement.

The S-CE carries out a division of two words which are assigned to the S-CE inputs as TRUE and in 2's complement. The result is assigned to the outputs A0 and AN0 as TRUE and in 2's complement.

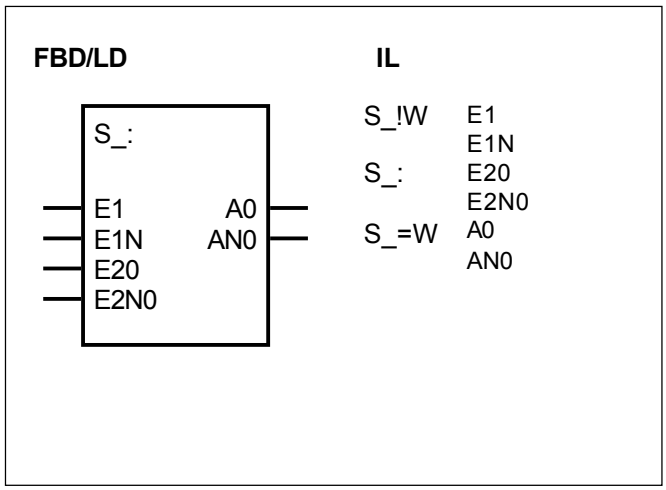

Parameters

E1	WORD	EW, MW, AW, KW	Data word 1, TRUE
E1N	WORD	EW, MW, AW, KW	Data word 1, 2's complement
E20	WORD	EW, MW, AW, KW	Data word 2, TRUE
E2N0	WORD	EW, MW, AW, KW	Data word 2, 2's complement
A0	WORD	MW	Result of the division, TRUE
AN0	WORD	MW	Result of the division, 2's complement

CE data

Output updating:	yes
Number of historical values:	none
Available as of:	ADVANT CONTROLLER 31-S, 907 PC 339

Description

The S-CE carries out a division of two words which are assigned to the S-CE inputs as TRUE and in 2's complement. The result is assigned to the outputs A0 and AN0 as TRUE and in 2's complement.

The inputs E20 and E2N0 and the outputs A0 and AN0 can be doubled in pairs. The inputs and outputs cannot be inverted.

Parameter overview

E1 is the CE input to which operand 1 is assigned.

E1N is the CE input to which the 2's complement of operand 1 is assigned.

E20 is the CE input to which operand 2 is assigned.

E2N0 is the CE input to which the 2's complement of operand 2 is assigned.

A0 is the CE output to which the result of the division is output as TRUE.

AN0 is the CE output to which the result of the division is output as 2's complement.

The S-CE carries out an addition of two double words (Type Longinteger) which are assigned to the S-CE inputs as TRUE and in 2's complement. The result is assigned to the outputs A0 and AN0 as TRUE and in 2's complement.

The result is limited to the maximum or minimum value of the number range.

If limiting has taken place, a +1 signal is assigned to the output Q. The result is corrected depending on the sign to -2 147 483 647 or 2 147 483 647.

If no limiting has taken place, a -2 signal is assigned to the output Q.

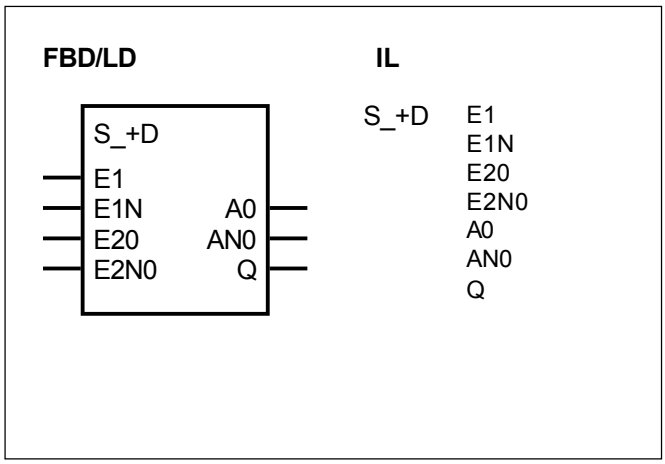

Parameters

E1	DOUBLE WORD	MD,KD	Data double word 1, TRUE
E1N	DOUBLE WORD	MD,KD	Data double word 1, 2's complement
E20	DOUBLE WORD	MD,KD	Data double word 2, TRUE
E2N0	DOUBLE WORD	MD,KD	Data double word 2, 2's complement
A0	DOUBLE WORD	MD	Result of the addition, TRUE
AN0	DOUBLE WORD	MD	Result of the addition, 2's complement
Q	WORD	MW,AW	Result limited

CE Data

Output updating:	yes
Number of historical values:	none
Available as of:	ADVANT CONTROLLER 31-S, 907 PC 339b

Description

The S-CE carries out an addition of two double words (Type Longinteger) which are assigned to the S-CE inputs as TRUE and in 2's complement. The result is assigned to the outputs A0 and AN0 as TRUE and in 2's complement.

The result is limited to the maximum or minimum value of the number range.

If limiting has taken place, a +1 signal is assigned to the output Q. The result is corrected depending on the sign to -2 147 483 647 or 2 147 483 647.

If no limiting has taken place, a -2 signal is assigned to the output Q.

The inputs and outputs can neither be doubled nor inverted.

Number range

The following generally applies:

Low limit	$8000\ 0001_H$	-2 147 483 647
High limit	$7FFF\ FFFF_H$	2 147 483 647
Inadmissible value	$8000\ 0000_H$	

The S-CE carries out a subtraction of two double words (Type Longinteger) which are assigned to the S-CE inputs as TRUE and in 2's complement. The result is assigned to the outputs A0 and AN0 as TRUE and in 2's complement.

The result is limited to the maximum or minimum value of the number range.

If limiting has taken place, a +1 signal is assigned to the output Q. The result is corrected depending on the sign to -2 147 483 647 or 2 147 483 647.

If no limiting has taken place, a -2 signal is assigned to the output Q.

FBD/LD

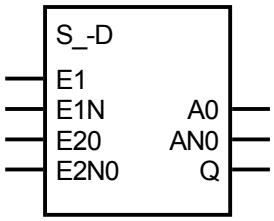

IL

```
S_-D   E1
       E1N
       E20
       E2N0
       A0
       AN0
       Q
```

Parameters

E1	DOUBLE WORD	MD,KD	Data double word 1, TRUE
E1N	DOUBLE WORD	MD,KD	Data double word 1, 2's complement
E20	DOUBLE WORD	MD,KD	Data double word 2, TRUE
E2N0	DOUBLE WORD	MD,KD	Data double word 2, 2's complement
A0	DOUBLE WORD	MD	Result of the subtraction, TRUE
AN0	DOUBLE WORD	MD	Result of the subtraction, 2's complement
Q	WORD	MW,AW	Result limited

CE Data

Output updating:	yes
Number of historical values:	none
Available as of:	ADVANT CONTROLLER 31-S, 907 PC 339b

Description

The S-CE carries out a subtraction of two double words (Type Longinteger) which are assigned to the S-CE inputs as TRUE and in 2's complement. The result is assigned to the outputs A0 and AN0 as TRUE and in 2's complement.

The result is limited to the maximum or minimum value of the number range.

If limiting has taken place, a +1 signal is assigned to the output Q. The result is corrected depending on the sign to -2 147 483 647 or 2 147 483 647.

If no limiting has taken place, a -2 signal is assigned to the output Q.

The inputs and outputs can neither be doubled nor inverted.

Number range

The following generally applies:

Low limit	$8000\ 0001_H$	-2 147 483 647
High limit	$7FFF\ FFFF_H$	2 147 483 647
Inadmissible value	$8000\ 0000_H$	

The S-CE carries out the multiplication of two double words (Type Longinteger) which are assigned to the S-CE inputs as TRUE and in 2's complement. The result is assigned to the outputs A0 and AN0 as TRUE and in 2's complement.

The result is limited to the maximum or minimum value of the number range.

If limiting has taken place, a +1 signal is assigned to the output Q. The result is corrected depending on the sign to -2 147 483 647 or 2 147 483 647.

If no limiting has taken place, a -2 signal is assigned to the output Q.

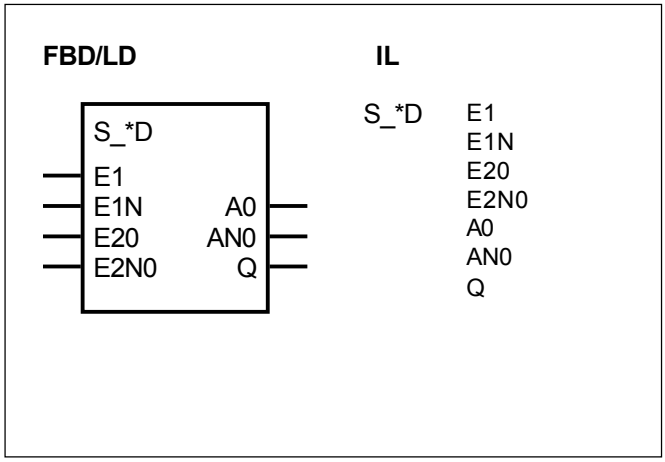

Parameters

E1	DOUBLE WORD	MD,KD	Data double word 1, TRUE
E1N	DOUBLE WORD	MD,KD	Data double word 1, 2's complement
E20	DOUBLE WORD	MD,KD	Data double word 2, TRUE
E2N0	DOUBLE WORD	MD,KD	Data double word 2, 2's complement
A0	DOUBLE WORD	MD	Result of the multiplication, TRUE
AN0	DOUBLE WORD	MD	Result of the multiplication, 2's complement
Q	WORD	MW,AW	Result limited

CE-Data

Output updating:	yes
Number of historical values:	none
Available as of:	ADVANT CONTROLLER 31-S, 907 PC 339b

Description

The S-CE carries out the multiplication of two double words (Type Longinteger) which are assigned to the S-CE inputs as TRUE and in 2's complement. The result is assigned to the outputs A0 and AN0 as TRUE and in 2's complement.

The result is limited to the maximum or minimum value of the number range.

If limiting has taken place, a +1 signal is assigned to the output Q. The result is corrected depending on the sign to -2 147 483 647 or 2 147 483 647.

If no limiting has taken place, a -2 signal is assigned to the output Q.

The inputs and outputs can neither be doubled nor inverted.

Number range

The following generally applies:

Low limit	$8000\ 0001_H$	-2 147 483 647
High limit	$7FFF\ FFFF_H$	2 147 483 647
Inadmissible value	$8000\ 0000_H$	

The S-CE carries out a division of two double words (Type Longinteger) which are assigned to the S-CE inputs as TRUE and in 2's complement. The result is assigned to the outputs A0 and AN0 as TRUE and in 2's complement.
The remainder is allocated to the operand at the output REST. If a remainder is present, the result will allways be rounded down.

The result is limited to the maximum or minimum value of the number range.

If limiting has taken place, e. g. by a division by "zero", a +1 signal is assigned to the output Q. The result is corrected depending on the sign to -2 147 483 647 or 2 147 483 647.

If no limiting has taken place, a -2 signal is assigned to the output Q.

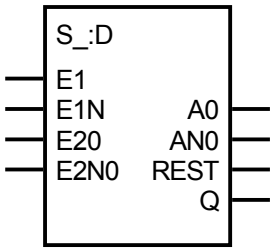

IL

```
S_:D   E1
       E1N
       E20
       E2N0
       A0
       AN0
       REST
       Q
```

Parameters

E1	DOUBLE WORD	MD,KD	Data double word 1, TRUE
E1N	DOUBLE WORD	MD,KD	Data double word 1, 2's complement
E20	DOUBLE WORD	MD,KD	Data double word 2, TRUE
E2N0	DOUBLE WORD	MD,KD	Data double word 2, 2's complement
A0	DOUBLE WORD	MD	Result of the division, TRUE
AN0	DOUBLE WORD	MD	Result of the division, 2's complement
REST	DOUBLE WORD	MD	Remainder of the division
Q	WORD	MW,AW	Result limited

CE-Data

Output updating:	yes
Number of historical values:	none
Available as of:	ADVANT CONTROLLER 31-S, 907 PC 339b

Description

The S-CE carries out a division of two double words (Type Longinteger) which are assigned to the S-CE inputs as TRUE and in 2's complement. The result is assigned to the outputs A0 and AN0 as TRUE and in 2's complement.
The remainder is allocated to the operand at the output REST. If a remainder is produced, the result will allways rounded down.

The result is limited to the maximum or minimum value of the number range.

If limiting has taken place, e. g. by a division with "zero", a +1 signal is assigned to the output Q. The result is corrected depending on the sign to -2 147 483 647 or 2 147 483 647.

If no limiting has taken place, a -2 signal is assigned to the output Q.

The inputs and outputs can neither be doubled nor inverted.

Number range

The following generally applies:

Low limit	$8000\ 0001_H$	-2 147 483 647
High limit	$7FFF\ FFFF_H$	2 147 483 647
Inadmissible value	$8000\ 0000_H$	

Example:

5:3 = 1 Remainder 2

6:3 = 2 Remainder 0

The value of the operand at the inputs EW/EWN is limited to the range between the upper (OG/OGN) and lower limit (UG/UGN).

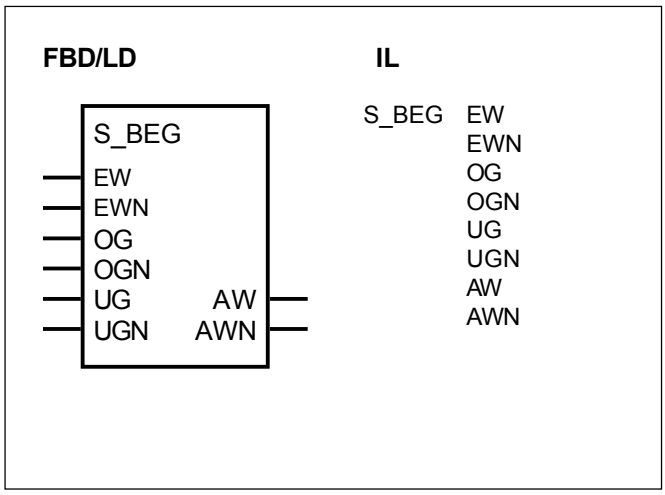

Parameters

EW	WORD	EW, MW, AW, KW	Input signal, TRUE
EWN	WORD	EW, MW, AW, KW	Input signal (2's complement)
OG	WORD	EW, MW, AW, KW	Upper limit value (TRUE)
OGN	WORD	EW, MW, AW, KW	Upper limit value (2's complement)
UG	WORD	EW, MW, AW, KW	Lower limit value (TRUE)
UGN	WORD	EW, MW, AW, KW	Lower limit value (2's complement)
AW	WORD	MW	Output of the limiter (TRUE)
AWN	WORD	MW	Output of the limiter (2's complement)

CE data

Output updating:	yes
Number of historical values:	none
Available as of:	ADVANT CONTROLLER 31-S, 907 PC 339

Description

The value of the operand at the inputs EW/EWN is limited to the range between the upper (OG/OGN) and lower limit (UG/UGN). The limit value is assigned to the outputs AW/AWN.

The input value to be limited as well as the lower and upper limit values must be assigned to the S-CE as TRUE and in 2's complement.

The inputs and outputs can neither be doubled nor inverted.

Parameter overview

EW is the CE input to which the input signal to be limited (TRUE) is assigned.

EWN is the CE input to which the input signal to be limited (2's complement) is assigned.

OG is the CE input to which the upper limit value (TRUE) is assigned.

OGN is the CE input to which the 2's complement of the upper limit value is assigned.

UG is the CE input to which the lower limit value (TRUE) is assigned.

UGN is the CE input to which the 2's complement of the lower limit value is assigned.

AW is the output of the limiter.

AWN is the output of the limiter for the 2's complement.

The S-CE reads the content of a variable, defined by basic address and offset, and stores the content at the outputs AW/AWN.

Indirect Read of data may only be carried out with safety-related data.

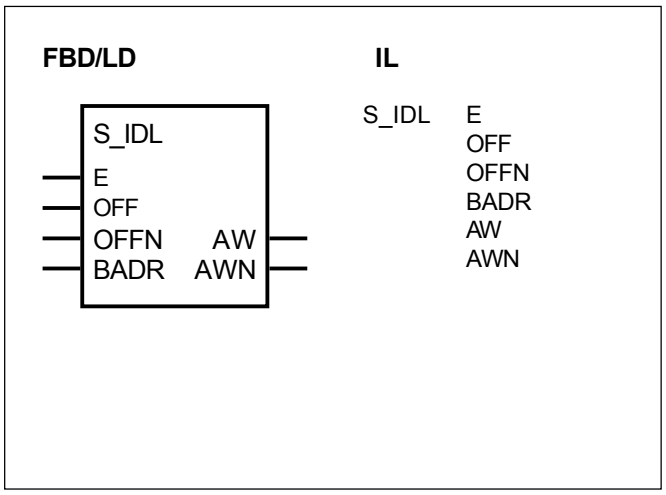

Parameters

E	WORD	EW, MW, AW, KW	Enable input in S format
OFF	WORD	EW, MW, AW, KW	Offset of the variable to be read (TRUE)
OFFN	WORD	EW, MW, AW, KW	Offset of the variable to be read (2's complement)
BADR	WORD	EW, MW, AW, KW	Basic address of the variable to be read
AW	WORD	MW	Output (TRUE)
AWN	WORD	MW	Output (2's complement)

CE data

Output updating:	no
Number of historical values:	none
Available as of:	ADVANT CONTROLLER 31-S, 907 PC 339

Description

The S-CE reads the content of a variable, defined by basic address and offset, and stores the content at the outputs AW/AWN.

The source variable to be read results from indexing the basic address ([BADR] + OFF). The value of the read source variable is assigned to the CE output AW/AWN in safety related data format.

The inputs and outputs can neither be doubled nor inverted.

E = 0 Function block is not processed. The outputs are not updated

E = 1 The value of the source variable is read and allocated to the target variables AW,AWN.

Parameter overview

E is the CE input to which the enable signal is assigned.

OFF is the CE input to which the offset of the value to be read (TRUE) is assigned.

OFFN is the CE input to which the 2's complement of the offset of the value to be read is assigned.

BADR is the CE input to which the basic address of the value to be read is assigned.

AW is the CE output.

AWN is the CE output for the 2's complement.

The S-CE serves for the indexed writing of safety-related word variables.
When the S-CE is enabled (E1), the value of the source variable QUEL (QUEN) is read and allocated to the target variable. The target variable is determined by indexing the basic variable with the corresponding offset addition.
The value is processed in TRUE and in 2's complement
E1 = +1
The S-CE is active, the value of the source variable is read and assigned to the target variable according to the address calculation.
E1 = -2
The S-CE is not active, there is no updating.
The latest status will remain unchanged.

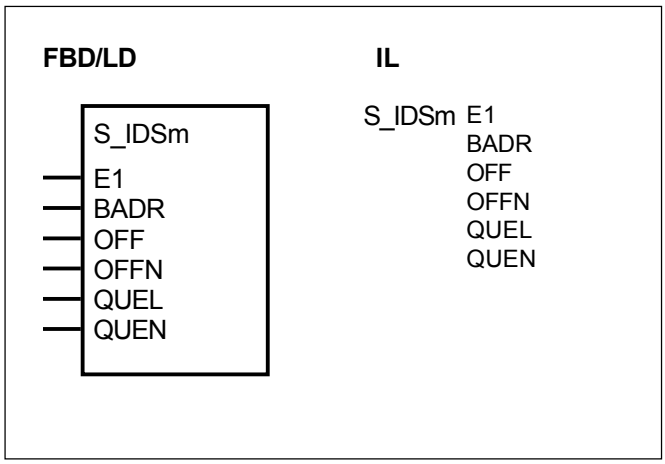

Parameters

E1	WORD	MW,KW	Enable input in S format
BADR	WORD	MW	Start address (data area)
OFF	WORD	EW,MW,AW,KW	Offset, TRUE
OFFN	WORD	EW,MW,AW,KW	Offset, 2's complement
QUEL	WORD	EW,MW,AW,KW	Source variable, TRUE
QUEN	WORD	EW,MW,AW,KW	Source variable, 2's complement

CE Data

Output updating:	yes
Number of historical values:	none
Available as of:	ADVANT CONTROLLER 31-S, 907 PC 339b

Description

The S-CE serves for the indexed writing of safety-related word variables.

When the S-CE is enabled (E1), the value of the source variable QUEL (QUEN) is read and allocated to the target variable. The target variable is determined by indexing the basic variable with the corresponding offset addition.

The value is processed in TRUE and in 2's complement

On the next page, you find an example for indirect writing of word variables

E1 = +1
The S-CE is active, the value of the source variable is read and assigned to the target variable according to the address calculation.
E1 = -2
The S-CE is not active, there is no updating.
The latest status will remain unchanged.
The inputs can neither be doubled nor inverted.

Example for indirect writing of word variables

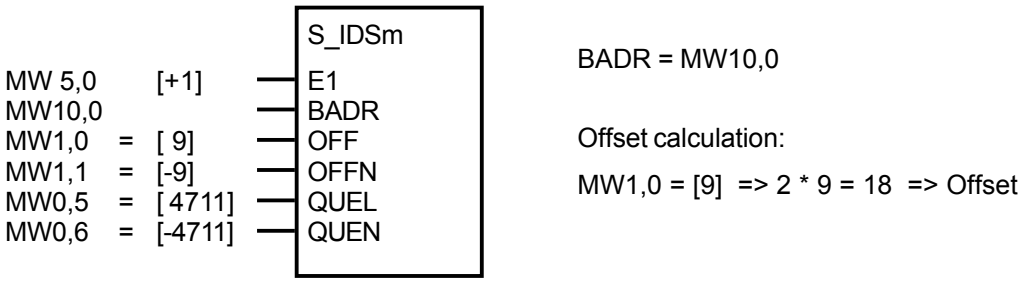

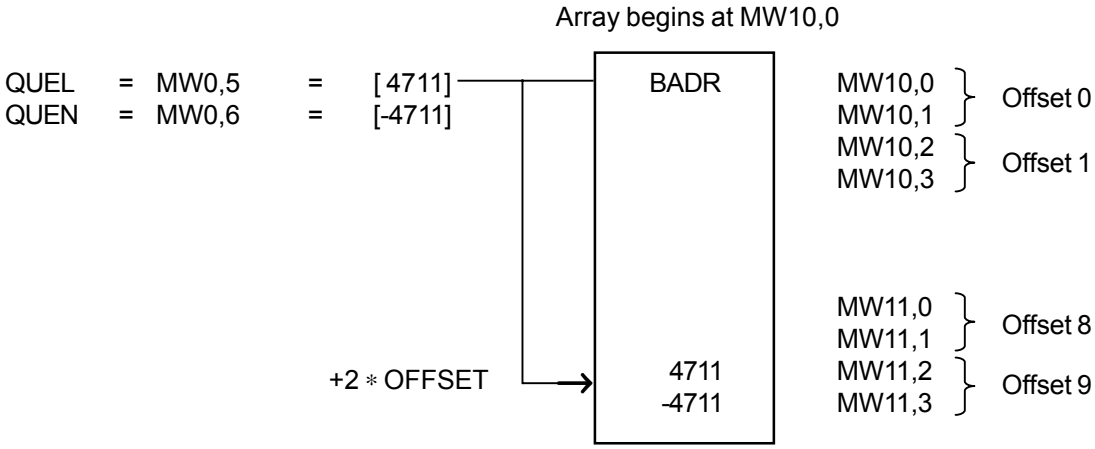

With the offset calculation MW1,0 [9], the value in MW 0,5 [4711] is allocated to the word variable MW11,2 and the value in MW0,6 [-4711] is allocated to the word variable MW11,3.

The S-CE assigns the data at W1/W1N for signal 0 and the data at W2/W2N for signal 1 to the outputs.

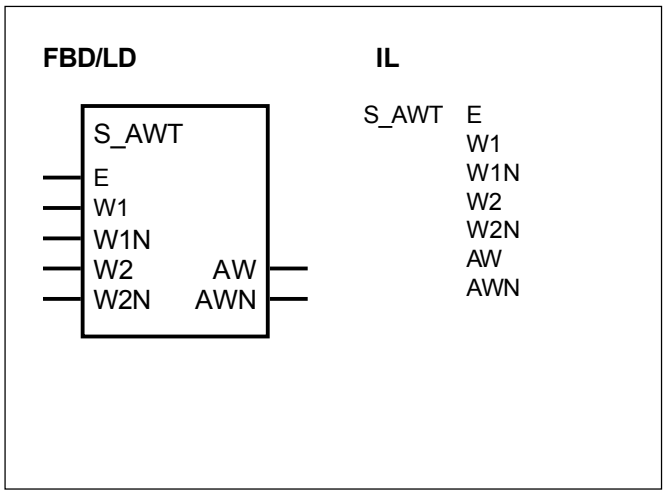

Parameters

E	WORD	EW, MW, AW, KW	Input signal in S format
W1	WORD	EW, MW, AW, KW	Value 1 (TRUE)
W1N	WORD	EW, MW, AW, KW	Value 1 (2's complement)
W2	WORD	EW, MW, AW, KW	Value 2 (TRUE)
W2N	WORD	EW, MW, AW, KW	Value 2 (2's complement)
AW	WORD	MW	Output of the selection gate (TRUE)
AWN	WORD	MW	Output of the selection gate (2's complement)

CE data

Output updating:	yes
Number of historical values:	none
Available as of:	ADVANT CONTROLLER 31-S, 907 PC 339

Description

The S-CE carries out a selection of the word inputs W1/W1N and W2/W2N and assigns the signal state to the output AW/AWN.

A signal 0 ($FFFE_H$) at input E assigns the word operand at output AW/AWN the word value at input W2/W2N. A signal 1 (0001_H) at input E assigns the word operand at output AW/AWN the word value at input W2/W2N.

The inputs and outputs can neither be doubled nor inverted.

Parameter overview

E is the CE input to which the selection signal is assigned.

W1 is the CE input to which the first word value (TRUE) is assigned.

W1N is the CE input to which the 2's complement of the first word value is assigned.

W2 is the CE input to which the second word value (TRUE) is assigned.

W2N is the CE input to which the 2's complement of the second word value is assigned.

AW is the output of the selection gate.

AWN is the output of the selection gate for the 2's complement.

The S-CE extracts the square root of a word variable which is assigned to the S-CE inputs as TRUE and in 2's complement. The result is assigned to the outputs A1 and A1N as TRUE and in 2's complement.

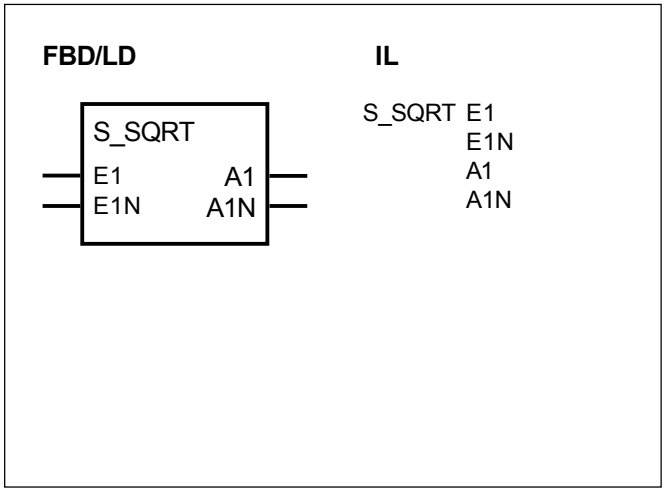

Parameters

E1	WORD	EW, MW, AW, KW	Data word, TRUE
E1N	WORD	EW, MW, AW, KW	Data word, 2's complement
A1	WORD	MW	Result of the square root, TRUE
A1N	WORD	MW	Result of the square root, 2's complement

CE data

Output updating:	yes
Number of historical values:	none
Available as of:	ADVANT CONTROLLER 31-S, 907 PC 339

Description

The S-CE extracts the square root of a word variable which is assigned to the S-CE inputs as TRUE and in 2's complement. The result is assigned to the outputs A1 and A1N as TRUE and in 2's complement.

The inputs and outputs can neither be doubled nor inverted.

A negative integer at input E1 leads to a stop of the PLC cycle, with an error message FK2.

Parameter overview

E1 is the CE input to which the operand is assigned.

E1N is the CE input to which the 2's complement of the operand is assigned.

A1 is the CE output to which the result of the square root is output as TRUE.

A1N is the CE output to which the result of the square root is output in 2's complement.

The S-CE calculates the sine value from the S-CE input ANG (ANGN) which are allocated to the S-CE inputs as TRUE and in 2's complement. The result is assigned to the output A0 (AN0) as TRUE and in 2's complement.

The result is within the range of

–100 000 .... + 100 000 (-1.0...1.0)

If the value at ANG is negative or >3600 (360°), the output A0 is set to 0 and the error output ERR is set to +1.

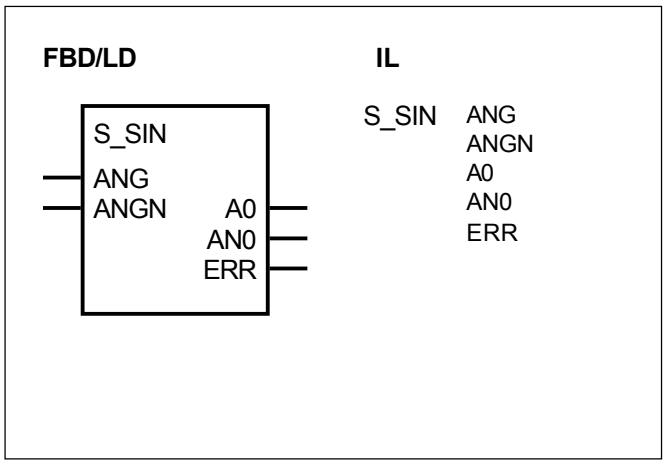

Parameters

ANG	WORD	EW,MW,KW	Angle 0 ... 3600 (corresponds to 0°... 360°), TRUE
ANGN	WORD	EW,MW,KW	Angle, 2's complement
A0	DOUBLE WORD	MD	Sine of the input value, TRUE
AN0	DOUBLE WORD	MD	Sine of the input value, 2's complement
ERR	WORD	MW,AW	ERR = +1; Error, if input value is negative or >3600

CE Data

Output updating:	yes
Number of historical values:	none
Available as of:	ADVANT CONTROLLER 31-S, 907 PC 339b

Description

The S-CE calculates the sine value from the S-CE input ANG (ANGN) which are allocated to the S-CE inputs as TRUE and in 2's complement. The result is assigned to the output A0 (AN0) as TRUE and in 2's complement.

The result is within the range of

–100 000 .... + 100 000 (-1.0.. 1.0)

If the value at ANG is negative or >3600 (360°), the output A0 is set to 0 and the error output ERR is set to +1.

The inputs and outputs can neither be doubled nor inverted.

Number range

The following generally applies:

Input $0 \leq$ ANG ≤ 3600
ERR = -2 and A0 = SIN(ANG)

Input ANG < 0 or ANG > 3600
ERR = +1 and A0 = 0

Example:

Input ANG = 0001 for 0.1 degrees
0010 for 1.0 degrees

SIN(30) => ANG(300) = 50000

The S-CE calculates the cosine value from the S-CE input ANG (ANGN) which are allocated to the S-CE inputs as TRUE and in 2's complement. The result is assigned to the output A0 (AN0) as TRUE and in 2's complement.

The result is within the range of

–100 000 .... + 100 000 (-1.0.. 1.0)

If the value at ANG is negative or >3600 (360°), the output A0 is set to 0 and the error output ERR is set to +1.

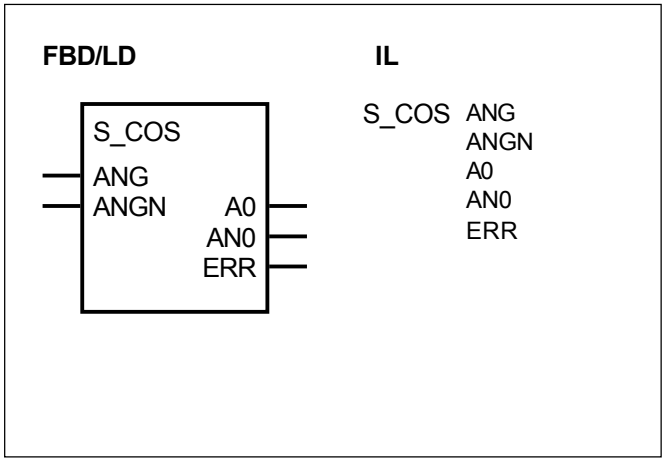

Parameters

ANG	WORD	EW,MW,KW	Angle 0 ... 3600 (corresponds to 0°... 360°), TRUE
ANGN	WORD	EW,MW,KW	Angle, 2's complement
A0	DOUBLE WORD	MD	Cosine of the input value, TRUE
AN0	DOUBLE WORD	MD	Cosine of the input value, 2's complement
ERR	WORD	MW,AW	ERR = +1; Error, if input value is negative or >3600

CE Data

Output updating:	yes
Number of historical values:	none
Available as of:	ADVANT CONTROLLER 31-S, 907 PC 339b

Description

The S-CE calculates the cosine value from the S-CE input ANG (ANGN) which are allocated to the S-CE inputs as TRUE and in 2's complement. The result is assigned to the output A0 (AN0) as TRUE and in 2's complement.

The result is within the range of

–100 000 .... + 100 000 (-1.0.. 1.0)

If the value at ANG is negative or >3600 (360°), the output A0 is set to 0 and the error output ERR is set to +1.

The inputs and outputs can neither be doubled nor inverted..

Number range

The following generally applies:

Input $0 \leq$ ANG ≤ 3600
ERR = -2 and A0 = COS(ANG)

Input ANG < 0 or ANG > 3600
ERR = +1 and A0 = 0

Example:

Input ANG = 0001 for 0.1 degrees
0010 for 1.0 degrees

COS(30) => ANG(300) = 86603

The S-CE calculates the arc tangent value from the S-CE input ARG (ARGN) which are allocated to the S-CE inputs as TRUE and in 2's complement.
The result is assigned to the output WKL (WKLN) as TRUE and in 2's complement.

The result is within the range of

0 ... 900 (0.0° ... 90.0°)

The inputs and outputs can neither be doubled nor inverted.

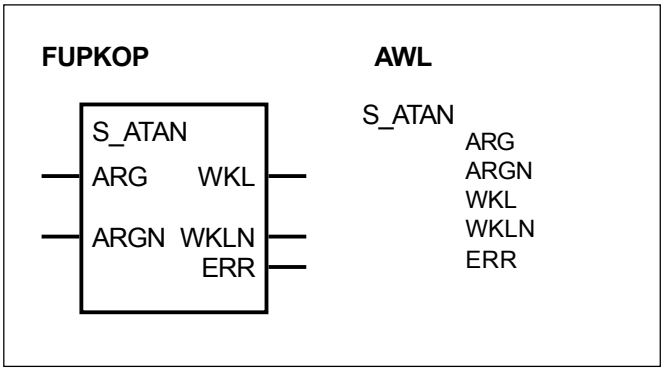

Parameter

ARG	DOUBLE WORD	MD, KD	Argument angle, TRUE
ARGN	DOUBLE WORD	MD, KD	Argument angle, 2's complement
WKL	WORD	MW, EW, AW	Arc tangent of argument, TRUE
WKLN	WORD	MW, EW, AW	Arc tangent of argument, 2's complement
ERR	WORD	MW, EW, AW	ERR = Error (if input value = negative)

CE-Data

Output updating:	yes
Number of historical values:	none
Available as of:	ADVANT CONTROLLER 31-S, 907 PC 339c

Description

The S-CE calculates the arc tangent value from the S-CE input ARG (ARGN) which are allocated to the S-CE inputs as TRUE and in 2's complement.
The result is assigned to the output WKL (WKLN) as TRUE and in 2's complement.

The result is within the range of

0 ... 900 (0.0° ... 90.0°)

The inputs and outputs can neither be doubled nor inverted.

Definition:

ARG () for values >= 1145916 => (1145.916)
the angle WKL is set to = 900 (90.0°).

Number range

The following generally applies:

ARG 0 <= ARG <= 1145.916
ERR = -2 and WKL = arctan (ARG)

ARG 0 < 0
ERR = 1 and WKL = 0

Example for input:

ARG = 0001 for 0.001
0010 for 0.010
1000 for 1.000

ARG	(0087)	=>	arctan (0.087)	=	49	(4.9°)
ARG	(0176)	=>	arctan (0.176)	=	99	(9.9°)
ARG	(0364)	=>	arctan (0.364)	=	200	(20.0°)
ARG	(1000)	=>	arctan (1.000)	=	450	(45.0°)
ARG	(1732)	=>	arctan (1.732)	=	600	(60.0°)
ARG	(114589)	=>	arctan (114.589)	=	895	(89.5°)
ARG	(572958)	=>	arctan (572.958)	=	899	(89.9°)

The CE carries out the initialization of a flag range which is defined by the basic address and the number of flags to be initialized.

FBD/LD

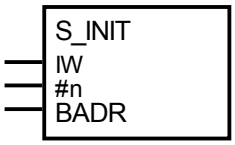

IL

```
S_INIT   IW
         #n
```

Parameters

IW	WORD	EW, AW, MW, KW	Initialization value (as a rule ”-2”)
#n	DIRECT CONSTANT	#,#H	Number of flags to be initialized
BADR	WORD	MW	Start address of the flag range

CE data

Output updating:	none
Number of historical values:	none
Available as of:	ADVANT CONTROLLER 31-S, 907 PC 339

Description

The CE carries out the initialization of a flag range which is defined by the basic address and the number of flags to be initialized. The initialization value is assigned to the CE input IW.

Note:
The CE may not be skipped because the initialization is executed only in the first PLC cycle.

The inputs can neither be doubled nor inverted.

Remark: to S_INIT
Initialization of the safety related word flag in the first PLC cycle takes a lot of CPU calculation time. Therefore one should not choose a greater word flag initialization range as really needed in the user program.

Parameter overview

IW initialization value, usually ”-2”

#n number of flags to be initialized

(allowable values: #1...#32767)

BADR start flag of the flag range

The CE carries out the initialization of 16 step chains to the basis value +1 (TRUE) and –1 (2's complement).

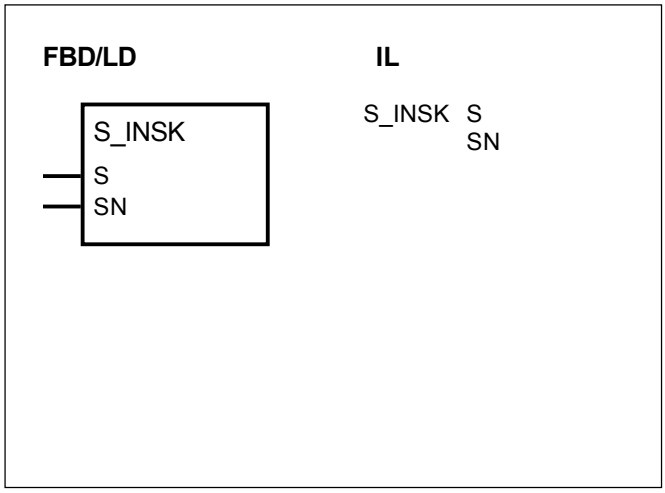

Parameters

S	WORD	MW	Start flag for the 16 step chains (TRUE) to be initialized
SN	WORD	MW	Start flag for the 16 step chains (2's complement) to be initialized

CE data

Output updating:	none
Number of historical values:	none
Available as of:	ADVANT CONTROLLER 31-S, 907 PC 339

Description

The CE carries out the initialization of 16 step chains to the basis value +1 (TRUE) and –1 (2's complement). Here, the flags at the CE inputs S/SN define the beginning of a flag group. If more than 16 step chains are necessary, further CEs S_INSK must be defined in the program.

If safety-related step chains are used, this module has always to be used.

Note:
The CE may not be skipped because the initialization is executed only in the first PLC cycle.

The inputs can neither be doubled nor inverted.

The word flags reserved for the step chains must not be used for other purposes

Example:

S=MW0,0 / SN=MW 1,0

Using these values, the CE S_INSK writes the value of +1 to the word flags MW0,0 to MW0,15 and the value of –1 to the word flags MW1,0 to MW1,15.

Parameter overview

S Start flag for the step chains (TRUE) to be initialized

SN Start flag for the step chains (2's complement) to be initialized

In a x/y coordinate system a polygon in S format is determined by n coordinate points XC0(XCN0)/ YC0(YCN0...XC_{n-1}(XCN_{n-1})/ YC_{n-1}(YCN_{n-1}).

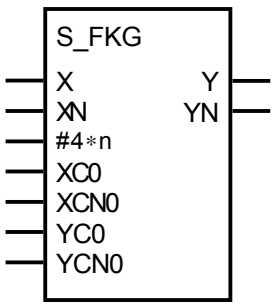

IL

```
S_FKG  X
       XN
       #4*n
       XC0
       XCN0
       YC0
       YCN0
       Y
       YN
```

Parameters

X	WORD	EW, MW, AW, KW	Data word x-value, TRUE
XN	WORD	EW, MW, AW, KW	Data word x value, 2's complement
#4*n	DIRECT CONSTANT	#,#H	n: number of nodes
XC0	WORD	EW, MW, AW, KW	Input for x-values of the nodes, TRUE
XCN0	WORD	EW, MW, AW, KW	Input for x-values of the nodes, 2's complement
YC0	WORD	EW, MW, AW, KW	Input for y-values of the nodes, TRUE
YCN0	WORD	EW, MW, AW, KW	Input for y-values of the nodes, 2's complement
Y	WORD	MW	Result of FKG, TRUE
YN	WORD	MW	Result of FKG, 2's complement

CE data

Output updating:	yes
Number of historical values:	none
Available as of:	ADVANT CONTROLLER 31-S, 907 PC 339

Description

In a x/y coordinate system a polygon in S format is determined by n coordinate points XC0(XCN0)/ YC0(YCN0...XC_{n-1}(XCN_{n-1})/ YC_{n-1}(YCN_{n-1}).

For the x-coordinates the following is valid:
XC0 < XC1 < XC2 < ... < XC_{n-1}

For the number of nodes the following is valid:
4 < #4*n < 32764
(#4*n is a multiple of 4)

The function generator performs a linear interpolation between the nodes. The resulting polygon represents the connection between the input value x and the output value y.

For the interpolation between two nodes the following equation is valid:

$$Y = \frac{(X - X_{i-1}) * (Y_i - Y_{i-1})}{X_i - X_{i-1}} + Y_{i-1}$$

Remark:
The division result is always rounded down, i.e. a remainder resulting from the division is not considered.

For the range outside the nodes the following is valid:

for x < XC0 y = YC0

for x > XC_{n-1} y = YCn-1

Only the inputs of the nodes can be doubled. The inputs and outputs cannot be inverted.

Example: 4 nodes (n = 4; #4 * n = 16)

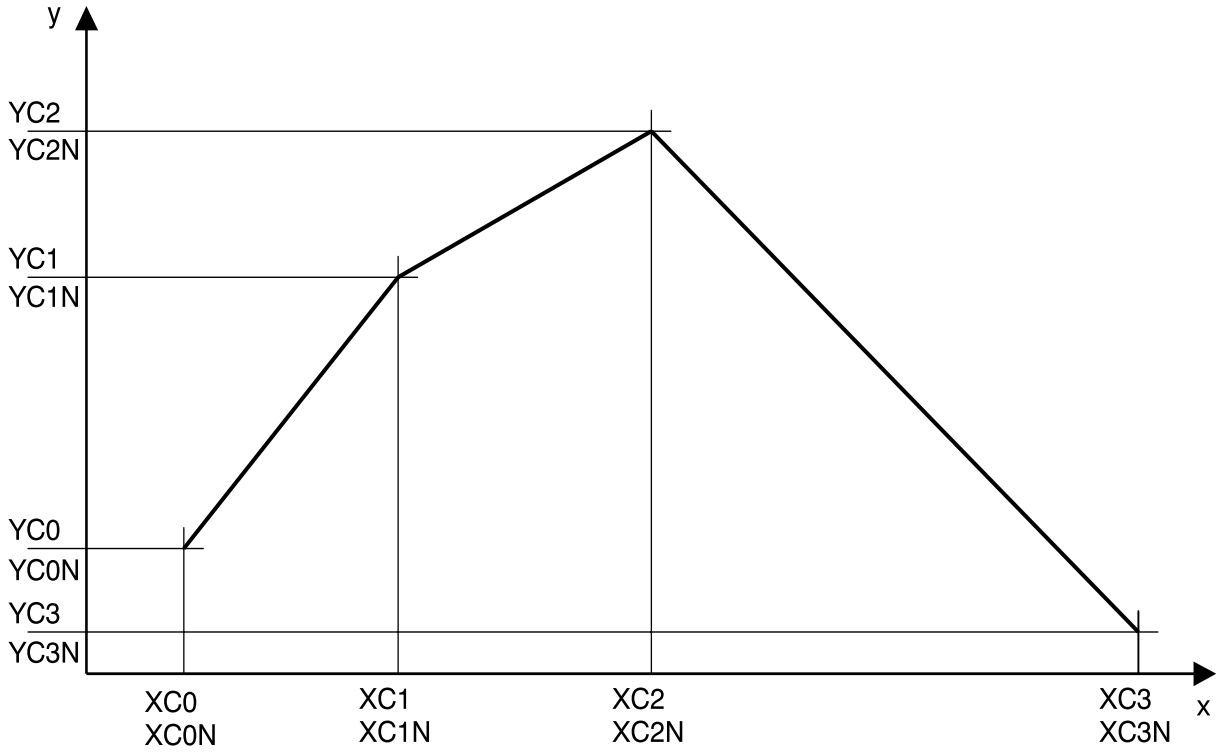

Parameter overview

X is the CE input where the current x-coordinate is predetermined (TRUE).

XN is the CE input to which the 2's complement of the x-coordinate is assigned.

#4*n is the CE input to which the number of nodes is assigned.

n = number of nodes
4*n = number of the XC(XCN)/YC(YCN) inputs of the CE

XC0...XCn-1 is the CE inputs where the x-coordinates of the n-nodes are predetermined (TRUE).

XCN0...XCNn-1 is the CE inputs to which the 2's complement of the x-coordinates is assigned.

YC0...YCn-1 is the CE inputs where the y-coordinates of the n-nodes are predetermined (TRUE).

YCN0...YCNn-1 is the CE inputs to which the 2's complement of the y-coordinates is assigned.

Y is the CE output to which the result of the function generator is output as TRUE.

YN is the CE output to which the result of the function generator is output in 2's complement.

The S-CE compares a predefined step number (#NR, #NRN) with the current step number (S, SN). As long as the predefined step number is equal to the current step number, the signal 1 in safety-related data format is read out at output A.

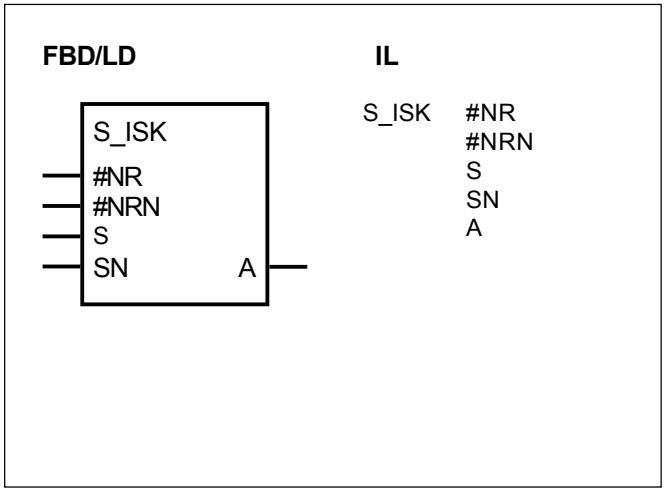

Parameters

#NR	DIRECT CONSTANT	#,#H	Step number to be interrogated (true value / +1...+32767)
#NRN	DIRECT CONSTANT	#,#H	Step number to be interrogated (inverse value / -1...-32767)
S	WORD	MW	Flag with current step number (TRUE)
SN	WORD	MW	Flag with current step number (INVERSE)
A	WORD	MW	Output (status of the step)

CE data

Output updating:	yes
Number of historical values:	none
Available as of:	ADVANT CONTROLLER 31-S, 907 PC 339

Description

The S-CE compares a predefined step number (#NR, #NRN) with the current step number (S, SN). As long as the predefined step number is equal to the current step number, the signal 1 in safety-related data format is read out at output A.

The inputs and the output can neither be doubled nor inverted.

Parameter overview

#NR Step number to be interrogated (true value / +1...+32767)

#NRN Step number to be interrogated (inverse value / -1...-32767)

S Flag with current step number (TRUE)

SN Flag with current step number (INVERSE)

A Output (status of the step)

The CE is used to set a step chain into a step, which is defined by a predetermined step number.

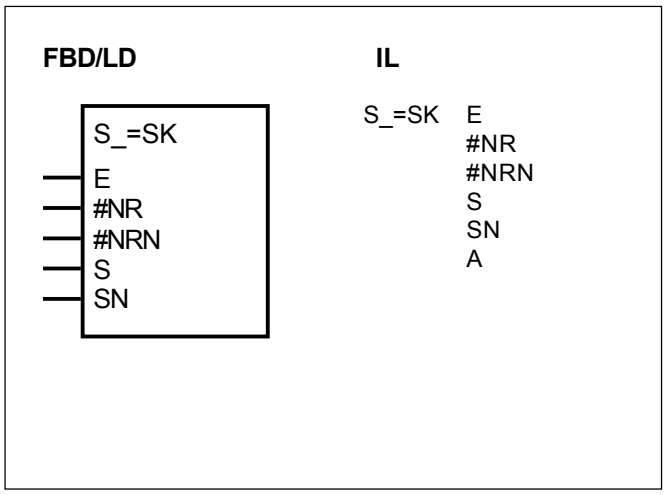

Parameters

E	WORD	EW, MW, AW, KW	Enable for setting the step
#NR	DIRECT CONSTANT	#,#H	Step number to be set (true value / +1...+32767)
#NRN	DIRECT CONSTANT	#,#H	Step number to be set (inverse value / -1...-32767)
S	WORD	MW	Flag for current step number (TRUE)
SN	WORD	MW	Flag for current step number (INVERSE)

CE data

Output updating:	yes
Number of historical values:	none
Available as of:	ADVANT CONTROLLER 31-S, 907 PC 339

Description

Applying a logical 1 to the CE input E in safety-related data format (0001_H), the step number defined by the values at #NR and #NRN is entered into the step chain flags S and SN. The value of 0 must not be used. Using the S-CE "S_INSK", the step chain flags S and SN must be initialized to the values of S=+1 and SN=-1 at program start.

The inputs can neither be doubled nor inverted.

Parameter overview

E Enable for setting the step

#NR Step number to be set (true value / +1...+32767)

#NRN Step number to be set (inverse value / -1...-32767)

S Flag with current step number (TRUE)

SN Flag with current step number (INVERSE)

The S-CE carries out a safe comparison ”equal” of two words which are assigned to the S-CE inputs as TRUE and in 2’s complement.

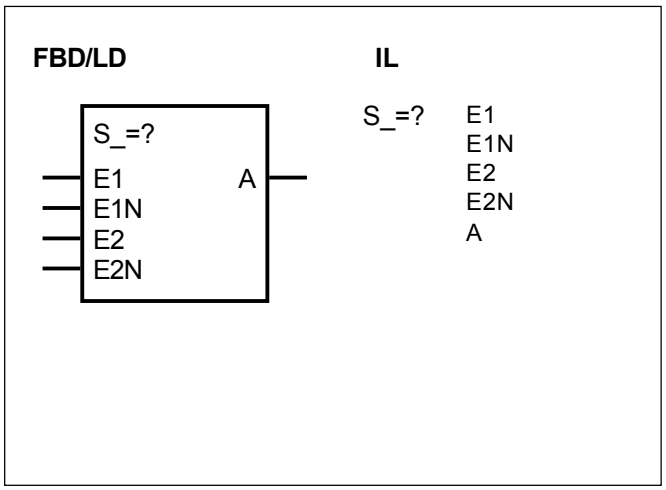

Parameters

E1	WORD	EW, MW, AW, KW	Data word 1, TRUE
E1N	WORD	EW, MW, AW, KW	Data word 1, 2’s complement
E2	WORD	EW, MW, AW, KW	Data word 2, TRUE
E2N	WORD	EW, MW, AW, KW	Data word 2, 2’s complement
A	WORD	MW	Comparison result in binary S format

CE data

Output updating:	yes
Number of historical values:	none
Available as of:	ADVANT CONTROLLER 31-S, 907 PC 339

Description

The S-CE carries out a safe comparison ”equal” of two words which are assigned to the S-CE inputs as TRUE and in 2’s complement.

If the value of E1 is equal to the value of E2, a signal 1 in S format (0001_H) is assigned to output A.

If the value of E1 is not equal to the value of E2, a signal 0 in S format ($FFFE_H$) is assigned to output A.

The inputs and the output can neither be doubled nor inverted.

Parameter overview

E1 is the CE input to which the first comparison operand is assigned.

E1N is the CE input to which the 2’s complement of E1 is assigned.

E2 is the CE input to which the second comparison operand is assigned.

E2N is the CE input to which the 2’s complement of E2 is assigned.

A is the CE output to which the comparison result is output.

The S-CE carries out a safe comparison ”less than” of two words which are assigned to the S-CE inputs as TRUE and in 2’s complement.

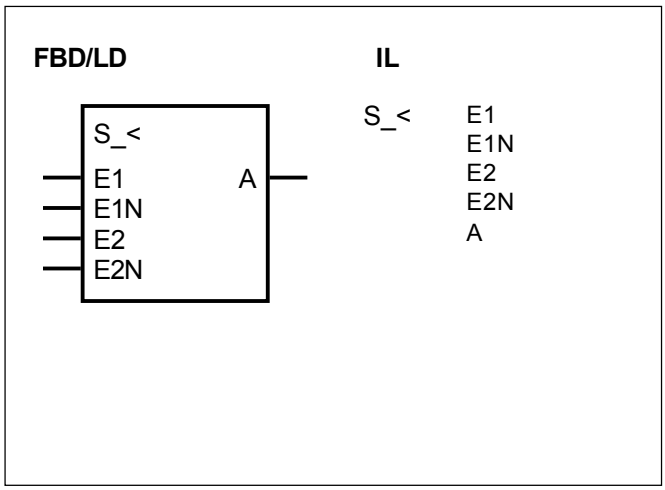

Parameters

E1	WORD	EW, MW, AW, KW	Data word 1, TRUE
E1N	WORD	EW, MW, AW, KW	Data word 1, 2’s complement
E2	WORD	EW, MW, AW, KW	Data word 2, TRUE
E2N	WORD	EW, MW, AW, KW	Data word 2, 2’s complement
A	WORD	MW	Comparison result in binary S format

CE data

Output updating:	yes
Number of historical values:	none
Available as of:	ADVANT CONTROLLER 31-S, 907 PC 339

Description

The S-CE carries out a safe comparison ”less than” of two words which are assigned to the S-CE inputs as TRUE and in 2’s complement.

If the value of E1 is less than the value of E2, a signal 1 in S format (0001_H) is assigned to output A.

If the value of E1 is greater than or equal to the value of E2, a signal 0 in S format ($FFFE_H$) is assigned to output A.

The inputs and the output can neither be doubled nor inverted.

Parameter overview

E1 is the CE input to which the first comparison operand is assigned.

E1N is the CE input to which the 2’s complement of E1 is assigned.

E2 is the CE input to which the second comparison operand is assigned.

E2N is the CE input to which the 2’s complement of E2 is assigned.

A is the CE output to which the comparison result is output.

The S-CE carries out a safe comparison "less than or equal" of two words which are assigned to the S-CE inputs as TRUE and in 2's complement.

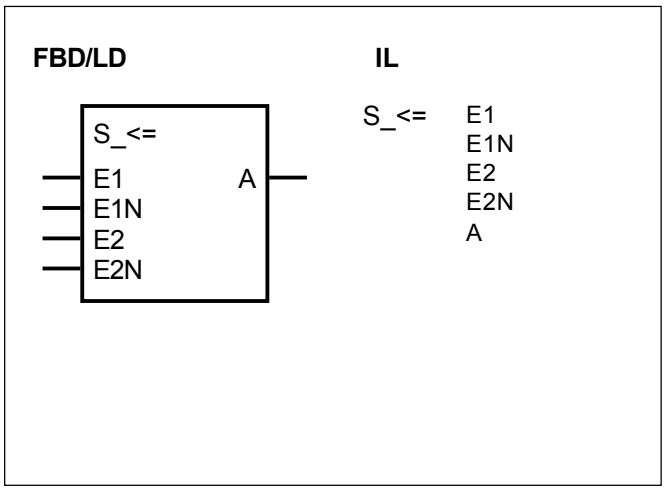

Parameters

E1	WORD	EW, MW, AW, KW	Data word 1, TRUE
E1N	WORD	EW, MW, AW, KW	Data word 1, 2's complement
E2	WORD	EW, MW, AW, KW	Data word 2, TRUE
E2N	WORD	EW, MW, AW, KW	Data word 2, 2's complement
A	WORD	MW	Comparison result in binary S format

CE data

Output updating:	yes
Number of historical values:	none
Available as of:	ADVANT CONTROLLER 31-S, 907 PC 339

Description

The S-CE carries out a safe comparison "less than or equal" of two words which are assigned to the S-CE inputs as TRUE and in 2's complement.

If the value of E1 is less than or equal to the value of E2, a signal 1 in S format (0001_H) is assigned to output A.

If the value of E1 is greater than the value of E2, a signal 0 in S format ($FFFE_H$) is assigned to output A.

The inputs and the output can neither be doubled nor inverted.

Parameter overview

E1 is the CE input to which the first comparison operand is assigned.

E1N is the CE input to which the 2's complement of E1 is assigned.

E2 is the CE input to which the second comparison operand is assigned.

E2N is the CE input to which the 2's complement of E2 is assigned.

A is the CE output to which the comparison result is output.

The S-CE carries out a safe comparison ”greater than” of two words which are assigned to the S-CE inputs as TRUE and in 2’s complement.

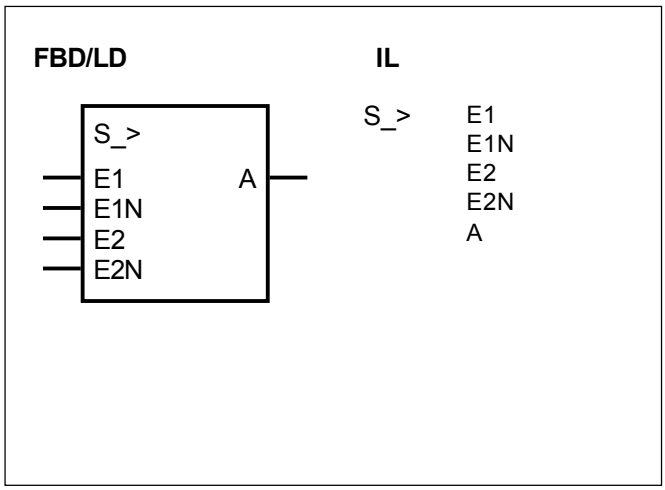

Parameters

E1	WORD	EW, MW, AW, KW	Data word 1, TRUE
E1N	WORD	EW, MW, AW, KW	Data word 1, 2’s complement
E2	WORD	EW, MW, AW, KW	Data word 2, TRUE
E2N	WORD	EW, MW, AW, KW	Data word 2, 2’s complement
A	WORD	MW	Comparison result in binary S format

CE data

Output updating:	yes
Number of historical values:	none
Available as of:	ADVANT CONTROLLER 31-S, 907 PC 339

Description

The S-CE carries out a safe comparison ”greater than” of two words which are assigned to the S-CE inputs as TRUE and in 2’s complement.

If the value of E1 is greater than the value of E2, a signal 1 in S format (0001_H) is assigned to output A.

If the value of E1 is less than or equal to the value of E2, a signal 0 in S format ($FFFE_H$) is assigned to output A.

The inputs and the output can neither be doubled nor inverted.

Parameter overview

E1 is the CE input to which the first comparison operand is assigned.

E1N is the CE input to which the 2’s complement of E1 is assigned.

E2 is the CE input to which the second comparison operand is assigned.

E2N is the CE input to which the 2’s complement of E2 is assigned.

A is the CE output to which the comparison result is output.

The S-CE carries out a safe comparison ”greater than or equal” of two words which are assigned to the S-CE inputs as TRUE and in 2’s complement.

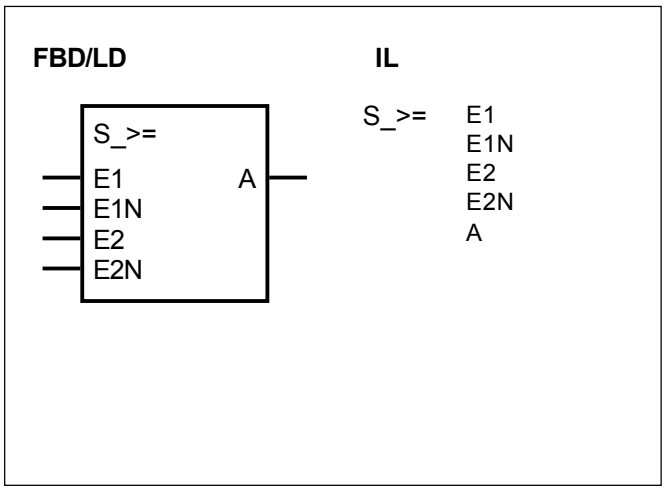

Parameters

E1	WORD	EW, MW, AW, KW	Data word 1, TRUE
E1N	WORD	EW, MW, AW, KW	Data word 1, 2’s complement
E2	WORD	EW, MW, AW, KW	Data word 2, TRUE
E2N	WORD	EW, MW, AW, KW	Data word 2, 2’s complement
A	WORD	MW	Comparison result in binary S format

CE data

Output updating:	yes
Number of historical values:	none
Available as of:	ADVANT CONTROLLER 31-S, 907 PC 339

Description

The S-CE carries out a safe comparison ”greater than or equal” of two words which are assigned to the S-CE inputs as TRUE and in 2’s complement.

If the value of E1 is greater than or equal to the value of E2, a signal 1 in S format (0001_H) is assigned to output A.

If the value of E1 is less than the value of E2, a signal 0 in S format ($FFFE_H$) is assigned to output A.

The inputs and the output can neither be doubled nor inverted.

Parameter overview

E1 is the CE input to which the first comparison operand is assigned.

E1N is the CE input to which the 2’s complement of E1 is assigned.

E2 is the CE input to which the second comparison operand is assigned.

E2N is the CE input to which the 2’s complement of E2 is assigned.

A is the CE output to which the comparison result is output.

The S-CE carries out a safe comparison ”unequal” of two words which are assigned to the S-CE inputs as TRUE and in 2’s complement.

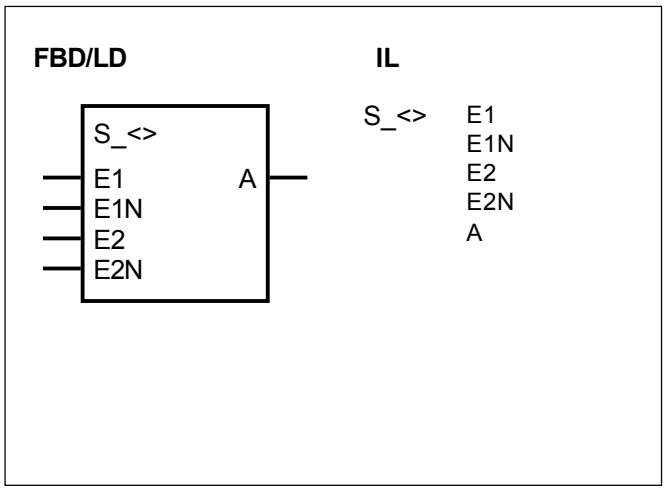

Parameters

E1	WORD	EW, MW, AW, KW	Data word 1, TRUE
E1N	WORD	EW, MW, AW, KW	Data word 1, 2’s complement
E2	WORD	EW, MW, AW, KW	Data word 2, TRUE
E2N	WORD	EW, MW, AW, KW	Data word 2, 2’s complement
A	WORD	MW	Comparison result in binary S format

CE data

Output updating:	yes
Number of historical values:	none
Available as of:	ADVANT CONTROLLER 31-S, 907 PC 339

Description

The S-CE carries out a safe comparison ”unequal” of two words which are assigned to the S-CE inputs as TRUE and in 2’s complement.

If the value of E1 is greater than or less than the value of E2, a signal 1 in S format (0001_H) is assigned to output A.

If the value of E1 is equal to the value of E2, a signal 0 in S format ($FFFE_H$) is assigned to output A.

The inputs and the output can neither be doubled nor inverted.

Parameter overview

E1 is the CE input to which the first comparison operand is assigned.

E1N is the CE input to which the 2’s complement of E1 is assigned.

E2 is the CE input to which the second comparison operand is assigned.

E2N is the CE input to which the 2’s complement of E2 is assigned.

A is the CE output to which the comparison result is output.

The S-CE realizes a logical AND combination of the signals E1 and E20. The result is assigned to the operand at output A. The CE internal processing is executed in the safe data format (logical ”0” = $FFFE_H$ and logical ”1” = 0001_H).

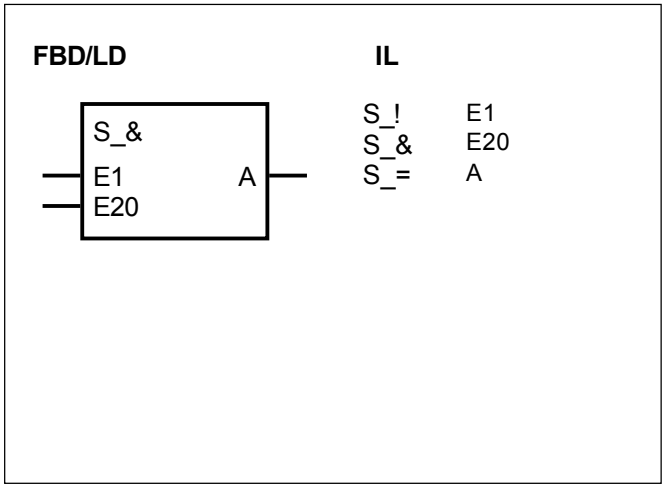

Parameters

E1	WORD	EW, MW, AW, KW	Operand 1 of the AND combination
E20	WORD	EW, MW, AW, KW	Operand 2 of the AND combination
A	WORD	MW	Result of the AND combination

CE data

Output updating:	yes
Number of historical values:	none
Available as of:	ADVANT CONTROLLER 31-S, 907 PC 339

Description

The S-CE realizes a logical AND combination of the signals E1 and E20. The result is assigned to the operand at output A. The CE internal processing is executed in the safe data format (logical ”0” = $FFFE_H$ and logical ”1” = 0001_H).

The input E20 can be doubled. The inputs and the output can be inverted.

Parameter overview

E1, E20 are the CE inputs to which data are assigned in binary S format, i.e. either 0001_H or $FFFE_H$.

A is the CE output to which the combination result is assigned in binary S format, i.e. either 0001_H or $FFFE_H$.

The S-CE realizes a logical OR combination of the signals E1 and E20. The result is assigned to the operand at output A. The CE internal processing is executed in the safe data format (logical ”0” = $FFFE_H$ and logical ”1” = 0001_H).

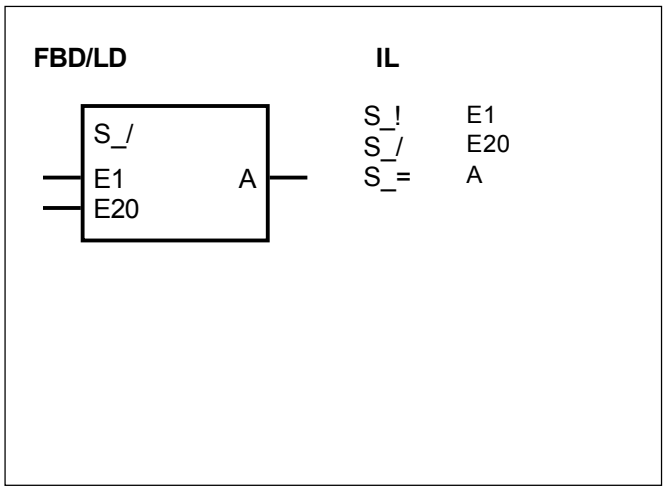

Parameters

E1	WORD	EW, MW, AW, KW	Operand 1 of the OR combination
E20	WORD	EW, MW, AW, KW	Operand 2 of the OR combination
A	WORD	MW	Result of the OR combination

CE data

Output updating:	yes
Number of historical values:	none
Available as of:	ADVANT CONTROLLER 31-S, 907 PC 339

Description

The S-CE realizes a logical OR combination of the signals E1 and E20. The result is assigned to the operand at output A. The CE internal processing is executed in the safe data format (logical ”0” = $FFFE_H$ and logical ”1” = 0001_H).

The input E20 can be doubled. The inputs and the output can be inverted.

Parameter overview

E1, E20 are the CE inputs to which data are assigned in binary S format, i.e. either 0001_H or $FFFE_H$.

A is the CE output to which the combination result is assigned in binary S format, i.e. either 0001_H or $FFFE_H$.

S-CE for the allocation of binary signals in safety-related data format (logical ”0” = $FFFE_H$ and logical ”1” = 0001_H).

FBD/LD

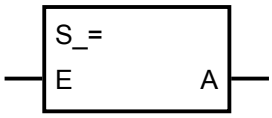

IL

```
S_!   E
S_=   A
```

Parameters

E	WORD	EW, MW, AW, KW	Input
A0	WORD	MW	Output

CE data

Output updating:	yes
Number of historical values:	none
Available as of:	ADVANT CONTROLLER 31-S, 907 PC 339

Description

S-CE for the allocation of binary signals in safety-related data format (logical ”0” = $FFFE_H$ and logical ”1” = 0001_H).

The output A0 can be doubled. The inputs and the output can be inverted.

Parameter overview

E is the CE input to which data are assigned in binary S format, i.e. either 0001_H or $FFFE_H$.

A is the CE output to which the binary input information is assigned in binary S format, i.e. either 0001_H or $FFFE_H$.

The S-CE carries out a conversion of an analog input signal (not safety-related) into the analog S format.

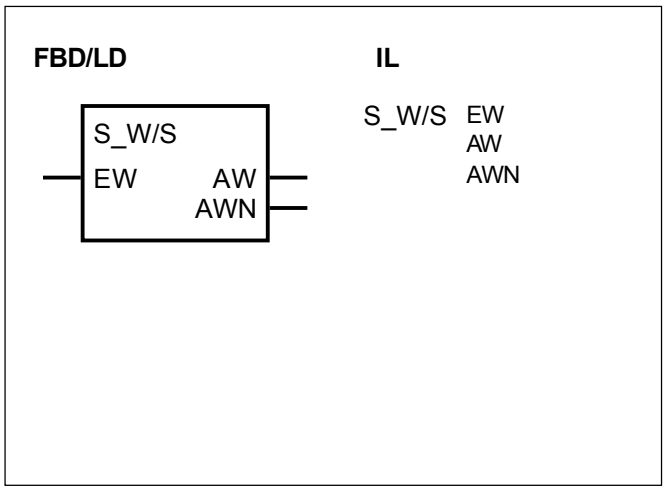

Parameters

EW	WORD	EW, MW, AW, KW	Analog input signal
AW	WORD	MW	Output of the converter (TRUE)
AWN	WORD	MW	Output of the converter (2's complement)

CE data

Output updating:	yes
Number of historical values:	none
Available as of:	ADVANT CONTROLLER 31-S, 907 PC 339

Description

The S-CE carries out a conversion of an analog input signal (not safety-related) into the analog S format.

The word information at the CE input EW is converted into TRUE and 2's complement data and assigned to the CE outputs AW and AWN.

The input and the outputs can neither be doubled nor inverted.

Parameter overview

EW is the CE input to which the analog input signal is assigned.

AW is the CE output to which the input information TRUE is output.

AWN is the CE output to which the input information in 2's complement is output.

The S-CE carries out a conversion of a binary input signal (not safety-related) into the binary S format.

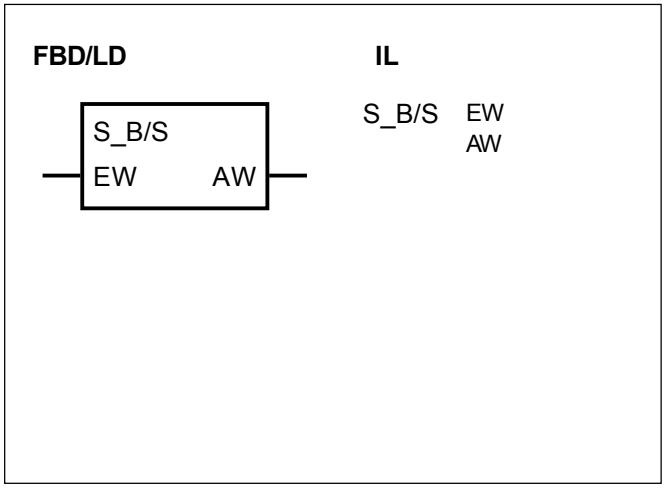

Parameters

E	BINARY	E, M, A, S, K	Binary input signal
AW	WORD	MW	Output of the converter

CE data

Output updating:	yes
Number of historical values:	none
Available as of:	ADVANT CONTROLLER 31-S, 907 PC 339

Description

The S-CE carries out a conversion of a binary input signal (not safety-related) into the binary S format.

A signal 0 (binary) at input E is converted into a safety-related signal 0 ($FFFE_H$). A signal 1 (binary) at input E is converted into a safety-related signal 1 (0001_H).

The input and output can neither be doubled nor inverted.

Parameter overview

E is the CE input to which the binary input signal is assigned.

AW output in S format.

The S-CE carries out a conversion of a S format into an analog input signal (not safety-related).

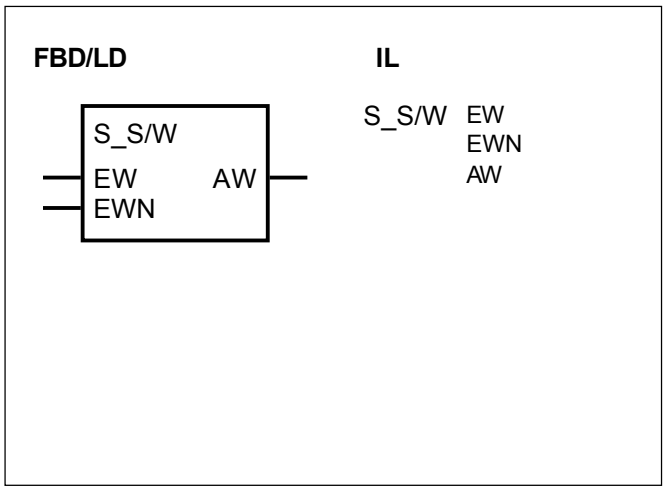

Parameters

EW	WORD	EW, MW, AW, KW	Input signal (TRUE)
EWN	WORD	EW, MW, AW, KW	Input signal (2's complement)
AW	WORD	MW	Output of the converter (analog)

CE data

Output updating:	yes
Number of historical values:	none
Available as of:	ADVANT CONTROLLER 31-S, 907 PC 339

Description

The S-CE carries out a conversion of an analog S format into an analog data format (not safety-related).

The safety-related word information at the CE inputs EW and EWN is converted into an analog data format and assigned to the CE output AW.

The inputs and the output can neither be doubled nor inverted.

Parameter overview

EW is the CE input to which the analog input signal (TRUE) is assigned.

EWN is the CE input to which the analog input signal (2's complement) is assigned.

AW is the CE output to which the input information in analog data format is output.

The S-CE carries out a conversion of a binary S format into binary (not safety-related) data format.

FBD/LD

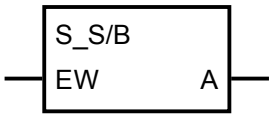

IL

```
S_S/B  EW
       A
```

Parameters

EW	WORD	EW, MW, AW, KW	Input signal in binary S format
A	BINARY	M, S, A	Output of the converter

CE data

Output updating:	yes
Number of historical values:	none
Available as of:	ADVANT CONTROLLER 31-S, 907 PC 339

Description

The S-CE carries out a conversion of a binary S format into binary (not safety-related) data format.

A logical 0 ($FFFE_H$) or a logical 1 (0001_H) in S format at the CE input EW is converted into a binary data format (0 or 1) and assigned to the CE output A.

The input and the output can neither be doubled nor inverted.

Parameter overview

EW is the CE input to which the safety-related binary input signal is assigned.

A is the CE output to which the input information in binary data format is output.

The S-CE converts the values of the word operands at the inputs E1 and E1N, which are assigned to the S-CE inputs as TRUE and in 2's complement, to the double word format.
The result is assigned to the double word operand at the outputs A1 and A1N as TRUE and in 2's complement.

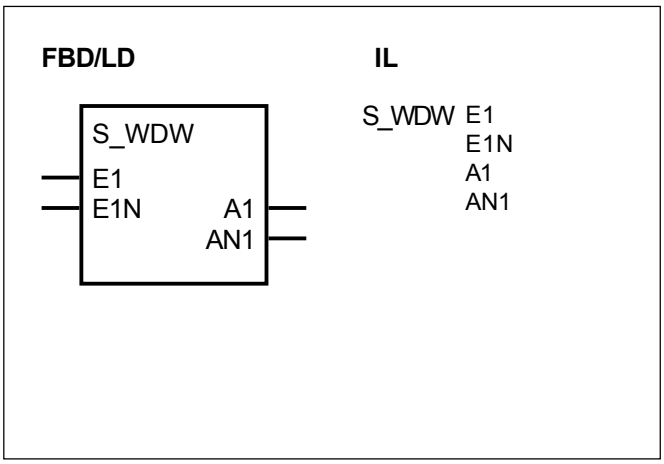

Parameters

E1	WORD	MW,KW	Word operand to be converted, TRUE
E1N	WORD	MW,KW	Word operand to be converted, 2's complement
A1	DOUBLE WORD	MD	Result of conversion (double word format), TRUE
AN1	DOUBLE WORD	MD	Result of conversion (double word format), 2's complement

CE Data

Output updating:	yes
Number of historical values:	none
Available as of:	ADVANT CONTROLLER 31-S, 907 PC 339b

Description

The S-CE converts the values of the word operands at the inputs E1 and E1N, which are assigned to the S-CE inputs as TRUE and in 2's complement, to the double word format.

The result is assigned to the double word operand at the outputs A1 and A1N as TRUE and in 2's complement.

The inputs and outputs can neither be doubled nor inverted.

Number range

The following generally applies:

Input (word operand)

-32767 < E1 (E1N) < 32767

Output (double word format)

-2 147 483 647 < A1 (AN1) < 2 147 483 647

The S-CE converts the values of the double word operand at the inputs E1 and E1N, which are assigned to the S-CE inputs as TRUE and in 2's complement, to the word format.
The result is assigned to the word operand at the outputs A1 and A1N as TRUE and in 2's complement.
The result is limited to the maximum or minimum value of the number range.
If limiting has taken place, a +1 signal is assigned to the output Q. The result is corrected depending on the sign to +32767 or -32767.
If no limiting has taken place, a -2 signal is assigned to the output Q.

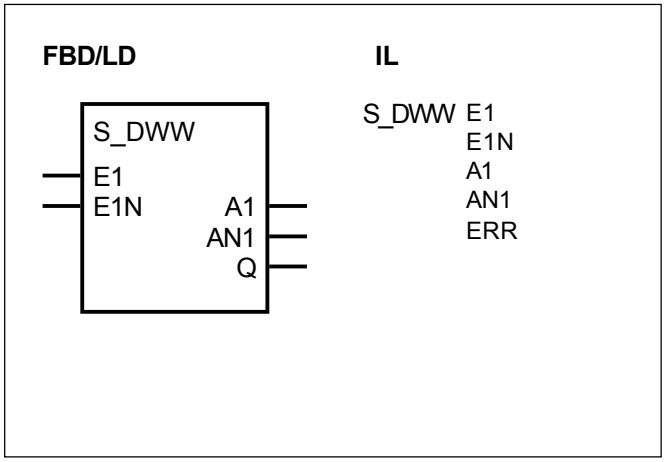

Parameters

E1	DOUBLE WORD	MD,KD	Double word operand to be converted, TRUE
E1N	DOUBLE WORD	MD,KD	Double word operand to be converted, 2's complement
A1	WORD	MW	Result of conversion (word format), TRUE
AN1	WORD	MW	Result of conversion (word format), 2's complement
Q	WORD	MW,AW	Result limited

CE Data

Output updating:	yes
Number of historical values:	none
Available as of:	ADVANT CONTROLLER 31-S, 907 PC 339b

Description

The S-CE converts the values of the double word operand at the inputs E1 and E1N, which are assigned to the S-CE inputs as TRUE and in 2's complement, to the word format.

The result is assigned to the word operand at the outputs A1 and A1N as TRUE and in 2's complement.

The result is limited to the maximum or minimum value of the number range.

If limiting has taken place, a +1 signal is assigned to the output Q. The result is corrected depending on the sign to +32767 or -32767.

If no limiting has taken place, a -2 signal is assigned to the output Q.

The inputs and outputs can neither be doubled nor inverted.

Number range

The following generally applies:

Input (double word operand)

-2 147 483 647 < E1 (E1N) < 2 147 483 647

Output (word format)

-32767 < A1 (AN1) < 32767

S-CE for setting a memory.

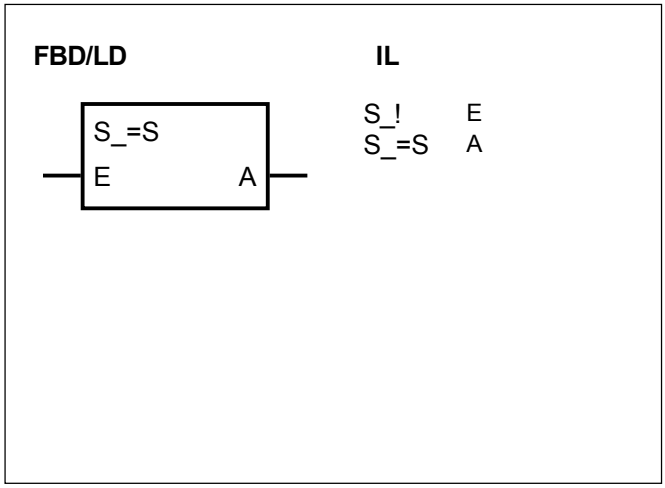

Parameters

E	WORD	EW, MW, AW, KW	Set input
A	WORD	MW	Memory output

CE data

Output updating:	yes
Number of historical values:	none
Available as of:	ADVANT CONTROLLER 31-S, 907 PC 339

Description

S-CE for setting a memory. The CE internal processing is executed in the safe data format (0 = $FFFE_H$ and 1 = 0001_H). The logical 1 state (0001_H) at input E sets the operand A to signal 1 (0001_H).

Input E can be inverted. The input and the output cannot be doubled.

Parameter overview

E is the CE input for setting the memory.

A is the CE output to which the memory result in binary S format is assigned, i.e. either 0001_H or $FFFE_H$.

S-CE for resetting a memory.

FBD/LD

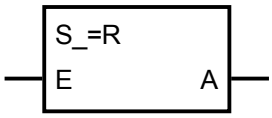

IL

```
S_!     E
S_=R    A
```

Parameters

E	WORD	EW, MW, AW, KW	Reset input
A	WORD	MW	Memory output

CE data

Output updating:	yes
Number of historical values:	none
Available as of:	ADVANT CONTROLLER 31-S, 907 PC 339

Description

S-CE for resetting a memory. The CE internal processing is executed in the safe data format (0 = $FFFE_H$ and 1 = 0001_H). The logical 1 state (0001_H) at input E resets the operand A to signal 0 ($FFFE_H$).

Input E can be inverted. The input and the output cannot be doubled.

Parameter overview

E is the CE input for resetting the memory.

A is the CE output to which the memory result in binary S format is assigned, i.e. either 0001_H or $FFFE_H$.

S-CE for setting and resetting a memory. The reset has priority over the setting.

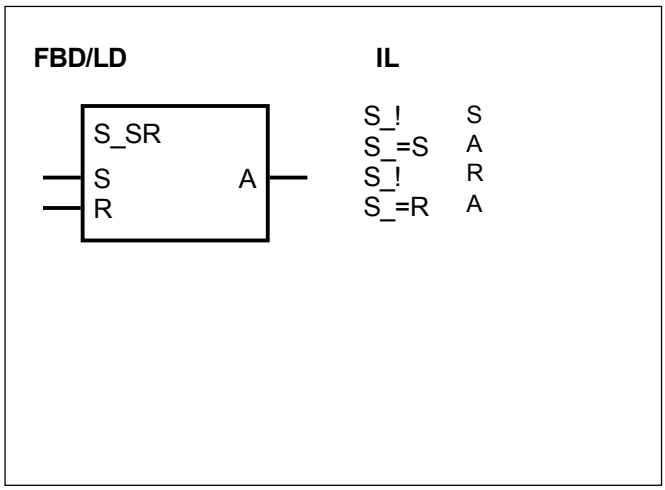

Parameters

S	WORD	EW, MW, AW, KW	Set input
R	WORD	EW, MW, AW, KW	Reset input
A	WORD	MW	Memory output

CE data

Output updating:	yes
Number of historical values:	none
Available as of:	ADVANT CONTROLLER 31-S, 907 PC 339

Description

S-CE for setting and resetting a memory. The reset has priority over the setting. The CE internal processing is executed in the safe data format (0 = $FFFE_H$ and 1 = 0001_H). The logical 1 state (0001_H) at input S sets the operand A to logical 1 (0001_H). The logical 1 state (0001_H) at input R resets the operand A to logical 0 ($FFFE_H$).

The simultaneous logical signal 1 (0001_H) at both inputs resets the output A to signal 0 ($FFFE_H$).

The inputs can be inverted. The inputs and the output cannot be doubled.

Parameter overview

S is the CE input for setting the memory.

R is the CE input for resetting the memory.

A is the CE output to which the memory result in binary S format is assigned, i.e. either 0001_H or $FFFE_H$.

S-CE for setting and resetting a memory. The setting has priority over the reset.

FBD/LD

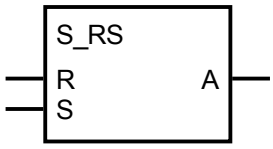

IL

```
S_!     S
S_=R    A
S_!     R
S_=S    A
```

Parameters

R	WORD	EW, MW, AW, KW	Reset input
S	WORD	EW, MW, AW, KW	Set input
A	WORD	MW	Memory output

CE data

Output updating:	yes
Number of historical values:	none
Available as of:	ADVANT CONTROLLER 31-S, 907 PC 339

Description

S-CE for setting and resetting a memory. The setting has priority over the reset. The CE internal processing is executed in the safe data format (0 = $FFFE_H$ and 1 = 0001_H). The logical 1 state (0001_H) at input S sets the operand A to logical 1 (0001_H). The logical 1 state (0001_H) at input R resets the operand A to logical 0 ($FFFE_H$).

The simultaneous logical signal 1 (0001_H) at both inputs sets the output A to signal 1 (0001_H).

The inputs can be inverted. The inputs and the output cannot be doubled.

Parameter overview

R is the CE input for resetting the memory.

S is the CE input for setting the memory.

A is the CE output to which the memory result in binary S format is assigned, i.e. either 0001_H or $FFFE_H$.

The S-CE assigns to output A the state at E0 for signal 0 and the state at E1 for signal 1.

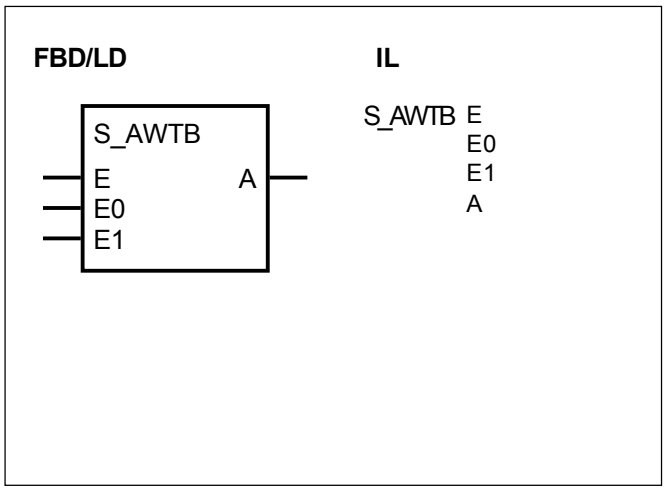

Parameters

E	WORD	EW, MW, AW, KW	Input signal in S format
E0	WORD	EW, MW, AW, KW	Value 1, binary signal in S format
E1	WORD	EW, MW, AW, KW	Value 2, binary signal in S format
A	WORD	MW	Output of the selection gate

CE data

Output updating:	yes
Number of historical values:	none
Available as of:	ADVANT CONTROLLER 31-S, 907 PC 339

Description

The S-CE carries out a selection of the binary inputs E0 and E1 and assigns the output A the signal state.

Signal 0 ($FFFE_H$) at input E assigns the value at input E0 to output A. Signal 1 (0001_H) at input E assigns the value at input E1 to output A.

The inputs and the output can neither be doubled nor inverted.

Parameter overview

E is the CE input to which the selection signal is assigned.

E0 is the CE input to which the first binary value is assigned.

E1 is the CE input to which the second binary value is assigned.

A is the output of the selection gate.

A logical signal 1 (0001_H) in safety-related data format at CE input ERR causes a program abort (stop of the PLC cycle).

FBD/LD

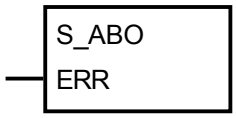

IL

```
S_ABO ERR
```

Parameters

ERR	WORD	EW, MW, AW, KW	Input signal in S format

CE data

Output updating:	none
Number of historical values:	none
Available as of:	ADVANT CONTROLLER 31-S, 907 PC 339

Description

A logical signal 1 (0001_H) in safety-related data format at CE input ERR causes a program abort.

In case of an abort, a FK2 error is generated. The program stops and the outputs are switched off. Using the terminal operation, information about error number (542) and error address are displayed.

The input can neither be doubled nor inverted.

Parameter overview

ERR is the CE input where the program abort is initiated.

Jump to a target label, if the jump condition is fulfilled ($E=0001_H$).

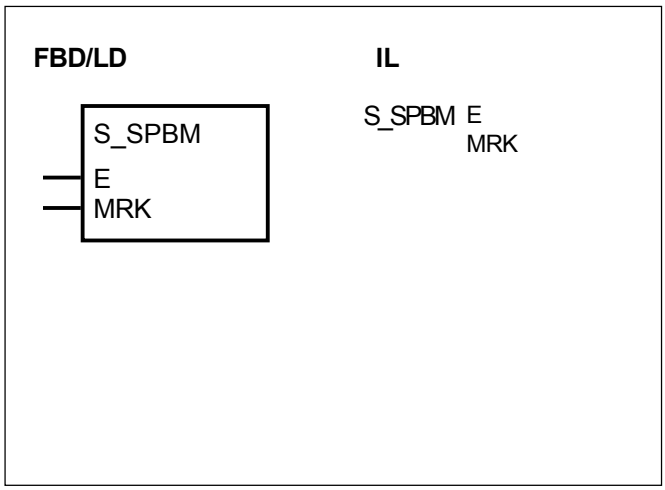

Parameters

E	WORD	EW, MW, AW, KW	Input signal (binary S format)
MRK	LABEL	MRK	Target label

CE data

Output updating:	yes
Number of historical values:	none
Available as of:	ADVANT CONTROLLER 31-S, 907 PC 339

Description

Jump to a target label, if the jump condition is fulfilled ($E=0001_H$).

The CE ”MRK” is the target label, the labels 0...999 can be used.

If jump condition (E=0001) is fulfilled , the program part between the CE’s ”SPBM” and ”MRK” is not processed.

The jump to a label may only be carried out from one point within the program.

The inputs can neither be doubled nor inverted.

Parameter overview

E is the CE input to which the jump condition is assigned.

MRK is the CE input for which the number of the target label (MRK=0...999) is entered.

The CRC8 function calculates a CRC8 check sum for the indicated flag range (start address and length) and makes it available at the output AW.

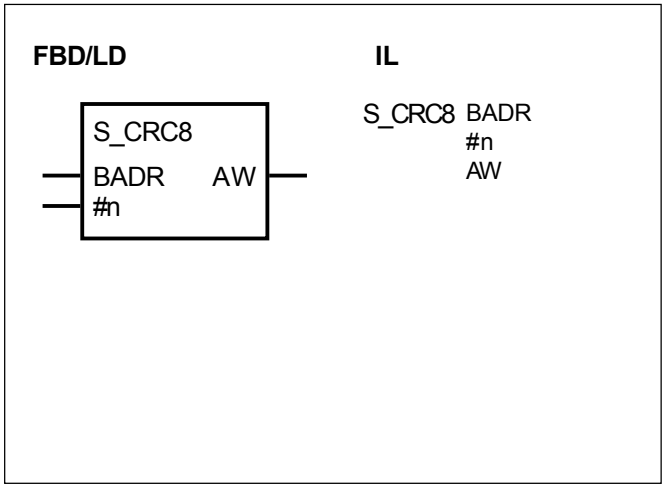

Parameters

BADR	WORD	MW	Start address of the flag range
#n	DIRECT CONSTANT	#,#H	Number of flags to be checked
AW	WORD	MW	CRC8 check sum for the flag range

CE data

Output updating:	yes
Number of historical values:	none
Available as of:	ADVANT CONTROLLER 31-S, 907 PC 339

Description

The CRC8 function calculates a CRC8 check sum for the indicated flag range (start address and length) and makes it available at the output AW. In this way, for instance flag ranges including ”sensitive” data can be protected additionally.

The inputs and the output can neither be doubled nor inverted.

Parameter overview

BADR is the start address of the range to be checked.

#n is the size of the range to be checked.

AW is the CE output to which the result of the CRC8 check is output.

A 0/1 edge ($FFFE_H$/0001_H edge) in safety-related data format at CE input T-0 is assigned to output A in S format delayed by the specified time.

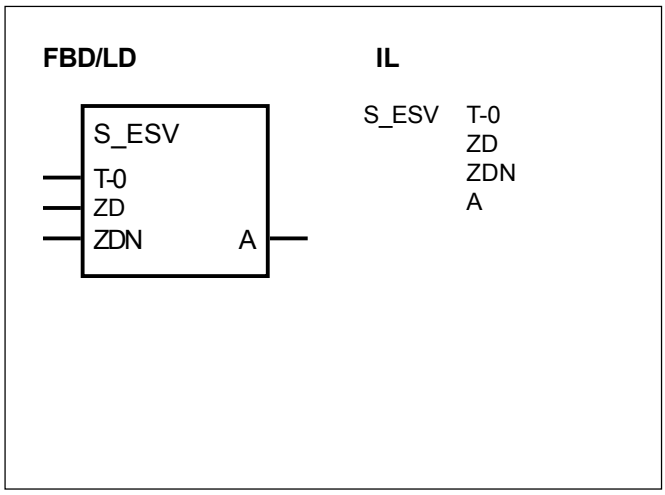

Parameters

T-0	WORD	EW, MW, AW, KW	Input signal in S format
ZD	DOUBLE WORD	MD, KD	Value of the time constant in ms (TRUE)
ZDN	DOUBLE WORD	MD, KD	Value of the time constant in ms (2's complement)
A	WORD	EW, MW, AW, KW	Output signal in S format

CE data

Output updating:	yes
Number of historical values:	3 words in historical value memory
Available as of:	ADVANT CONTROLLER 31-S, 907 PC 339

Description

A 0/1 edge ($FFFE_H$/0001_H edge) in safety-related data format at CE input T-0 is assigned to output A in S format delayed by the specified time.

If the input returns to 0 level before the delay time has expired, the output A remains on 0 level.

The time is entered in milliseconds. Only integer multiples of 5 ms are allowed (Example: 5 ms, 10 ms, 500 ms, 100000 ms ...).
Time range: 5 ms ... 24.8 days.

For the indirect constant, the value for the time delay is entered in long text.

Maximum time offset at the output: < 1 cycle time

Sensible range for KD: > 1 cycle time

The inputs and the output can neither be doubled nor inverted.

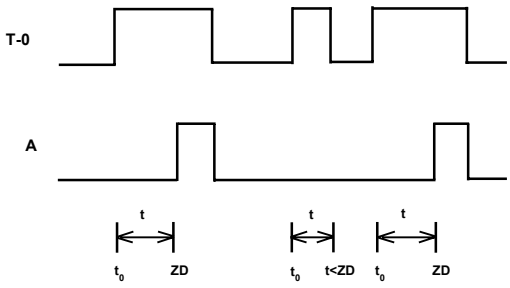

Parameter overview

T-0 is the CE input to be delayed.

ZD is the CE input to which the delay time (TRUE) is assigned.

ZDN is the CE input to which the delay time (2's complement) is assigned.

A is the CE output to which the delayed signal is put out in S format.

General behavior

Started timers are processed by the PLC's operating system and are therefore completely independent of processing of the PLC program. An appropriate message of the operating system is not issued to the affiliated timer block in the PLC program until the timer has elapsed.

Processing of a timer in the PLC's operating system is *not* influenced by the following commands:
- Abort program
- Start program
- Stop program
- Continue program

That is to say, processing of a started timer is continued in the PLC's operating system even if the affiliated PLC program is aborted, restarted or stopped and continued again.

Initialization

The timers are always initialized each time a cold or warm start of the PLC is executed. A running timer will always be aborted by a cold or warm start of the PLC.

Cold start:
- KALT <CR> command
- Activating the voltage for the first time

Warm start:
- WARM <CR> command
- Activating the voltage
- RESET switch

Important note

The behaviour of the timers has been changed. All running timers are stopped when one of the following actions occurs:
- Abort PLC program
- RUN/STOP switch from RUN –> STOP

A 1/0 edge (0001_H/$FFFE_H$ edge) in safety-related data format at CE input 0-T is assigned to output A in S format delayed by the specified time.

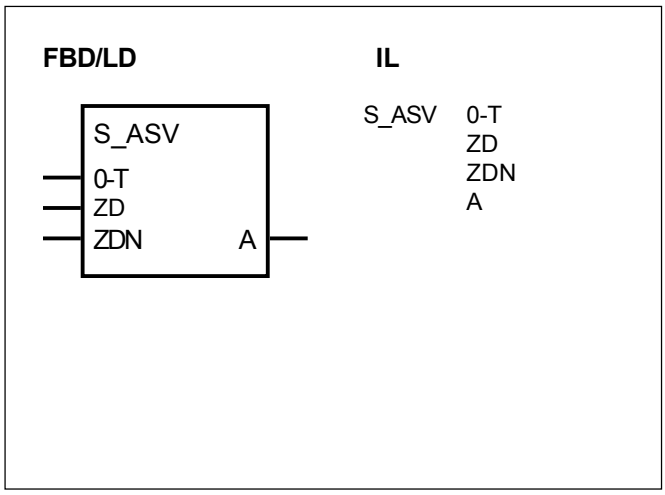

Parameters

0-T	WORD	EW, MW, AW, KW	Input signal in S format
ZD	DOUBLE WORD	MD, KD	Value of the time constant in ms (TRUE)
ZDN	DOUBLE WORD	MD, KD	Value of the time constant in ms (2's complement)
A	WORD	MW	Output signal in S format

CE data

Output updating:	yes
Number of historical values:	3 words in historical value memory
Available as of:	ADVANT CONTROLLER 31-S, 907 PC 339

Description

A 1/0 edge (0001_H/$FFFE_H$ edge) in safety-related data format at CE input 0-T is assigned to output A in S format delayed by the specified time.

If the input returns to 1 level before the delay time has expired, the output A remains on 1 level.

The time is entered in milliseconds. Only integer multiples of 5 ms are allowed (Example: 5 ms, 10 ms, 500 ms, 100000 ms ...).
Time range: 5 ms ... 24.8 days.

For the indirect constant, the value for the time delay is entered in long text.

Maximum time offset at the output: < 1 cycle time

Sensible range for KD: > 1 cycle time

The inputs and the output can neither be doubled nor inverted.

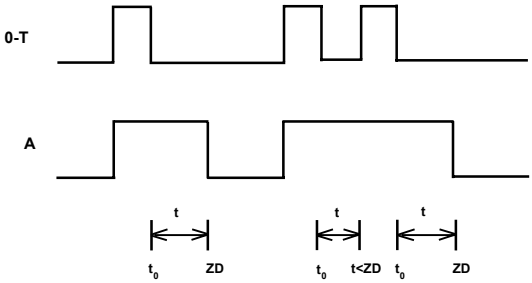

Parameter overview

0-T is the CE input to be delayed.

ZD is the CE input to which the delay time (TRUE) is assigned.

ZDN is the CE input to which the delay time (2's complement) is assigned.

A is the CE output to which the delayed signal is put out in S format.

General behavior

Started timers are processed by the PLC's operating system and are therefore completely independent of processing of the PLC program. An appropriate message of the operating system is not issued to the affiliated timer block in the PLC program until the timer has elapsed.

Processing of a timer in the PLC's operating system is *not* influenced by the following commands:
- Abort program
- Start program
- Stop program
- Continue program

That is to say, processing of a started timer is continued in the PLC's operating system even if the affiliated PLC program is aborted, restarted or stopped and continued again.

Initialization

The timers are always initialized each time a cold or warm start of the PLC is executed. A running timer will always be aborted by a cold or warm start of the PLC.

Cold start:
- KALT <CR> command
- Activating the voltage for the first time

Warm start:
- WARM <CR> command
- Activating the voltage
- RESET switch

Important note

The behaviour of the timers has been changed. All running timers are stopped when one of the following actions occurs:
- Abort PLC program
- RUN/STOP switch from RUN –> STOP

A 0/1 edge ($FFFE_H$/0001_H edge) in safety-related data format at CE input 0-1 generates a 1 pulse at output PULS for the period of a PLC program cycle in S format.

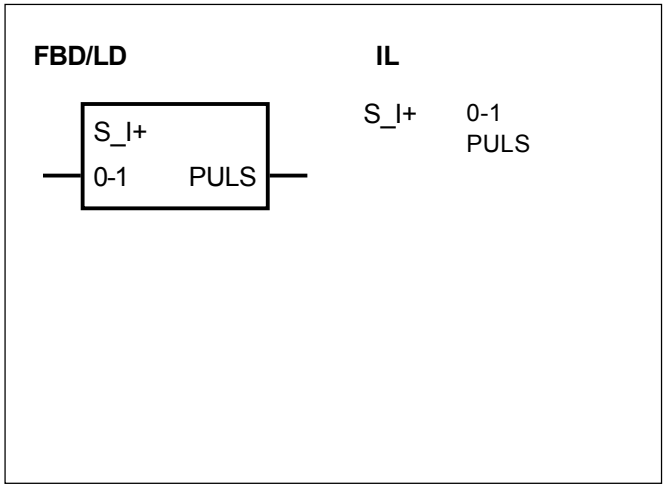

Parameters

0-1	WORD	EW, MW, AW, KW	Input signal in S format
PULS	WORD	MW	Pulse signal in S format

CE data

Output updating:	yes
Number of historical values:	1 word in historical value memory
Available as of:	ADVANT CONTROLLER 31-S, 907 PC 339

Description

A 0/1 edge ($FFFE_H$/0001_H edge) in safety-related data format at CE input 0-1 generates a 1 pulse at output PULS for the period of a PLC program cycle in S format.

The input and the output can neither be doubled nor inverted.

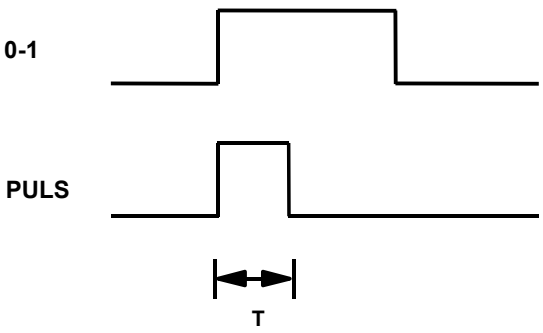

Parameter overview

0-1 is the CE input which 0/1 edge should be monitored.

PULS Output signal in S format

A 1/0 edge (0001_H/$FFFE_H$ edge) in safety-related data format at CE input 1-0 generates a 1 pulse at output PULS for the period of a PLC program cycle in S format.

FBD/LD

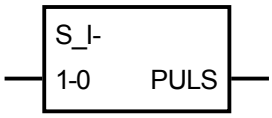

IL

```
S_I-   1-0
       PULS
```

Parameters

1-0	WORD	EW, MW, AW, KW	Input signal in S format
PULS	WORD	MW	Pulse signal in S format

CE data

Output updating:	yes
Number of historical values:	1 word in historical value memory
Available as of:	ADVANT CONTROLLER 31-S, 907 PC 339

Description

A 1/0 edge (0001_H/$FFFE_H$ edge) in safety-related data format at CE input 1-0 generates a 1 pulse at output PULS for the period of a PLC program cycle in S format.

The input and the output can neither be doubled nor inverted.

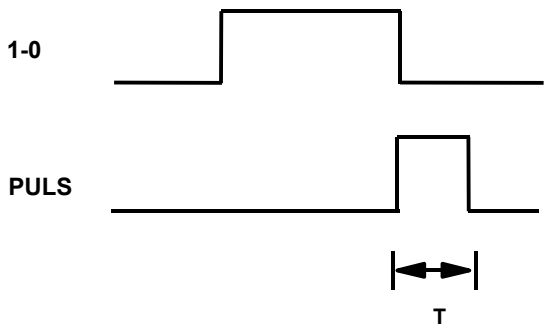

Parameter overview

1-0 is the CE input which 1/0 edge should be monitored.

PULS Output signal in S format

Manual No.: 2CDC 120 044 M0203

ABB STOTZ-KONTAKT GmbH
Eppelheimer Straße 82 Postfach 101680
69123 Heidelberg 69006 Heidelberg
Germany Germany

Telephone +49 6221 701-0
Telefax +49 6221 701-240
E-Mail desst.helpline@de.abb.com
Internet http://www.abb.de/stotz-kontakt